e1 Touch

Hose Fitting

(PPF)

ST(Soft Seal)Fitting Series

DIMENSION SHEET

IHARA SCIENCE CORPORATION

Visual Index

1	Plug **E1BA**	2	Cap **E1CA**	3	Male pipe weld Connector **E1CB**
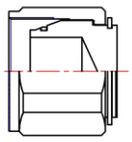		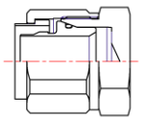		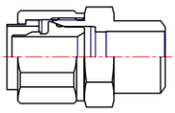	
4	O-ring seal Male Connector **E1CO**	5	Male Connector **E1CT**	6	O-ring seal Male Connector **E1CU**
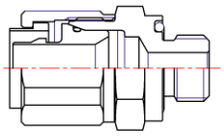		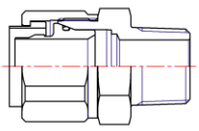		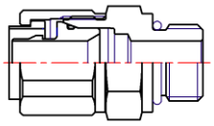	
7	Union Elbow **E1LA**	8	Male pipe weld Elbow **E1LB**	9	Female Elbow **E1LF**
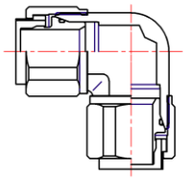		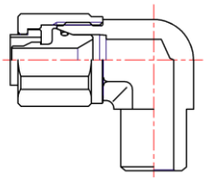		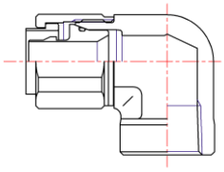	
10	Elbow Adaptor **E1LH**	11	Elbow Connector **E1LN**	12	Positional Male Elbow **E1LO**
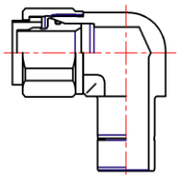		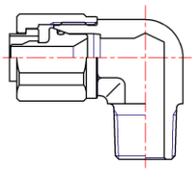		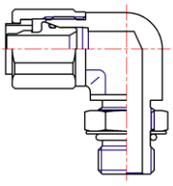	
13	BI-Lok Conversion Reducing Elbow **E1LRB**	14	Nut **E1NA**	15	Sleeve **E1OS**
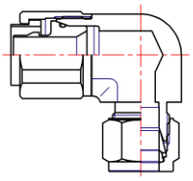		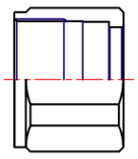		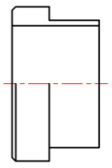	
16	Reducer **E1RE**	17	Female Connector **E1SA**	18	Bulkhead Male Connector **E1SC**
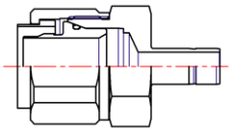		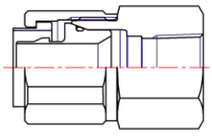		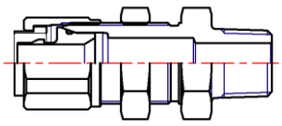	

Visual Index

19	Bulkhead Union Elbow **E1SL**	20	Bulkhead Male Connector **E1SS**	21	Bulkhead Union **E1SU**
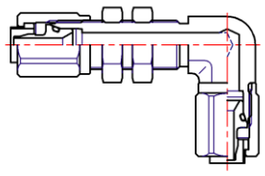		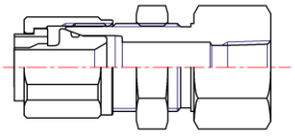		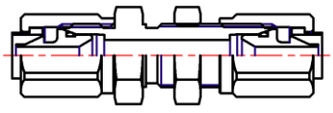	
22	BI-Lok Conversion Bulkhead Union **E1SUY**	23	Union Tee **E1TA**	24	Insert **E1TI**
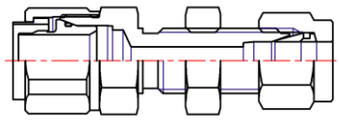		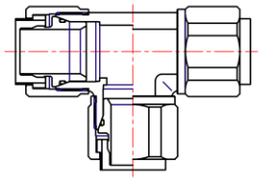		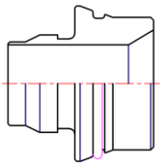	
25	O-ring **E1TI-OR**	26	Male Run Tee **E1TK**	27	Male Branch Tee **E1TN**
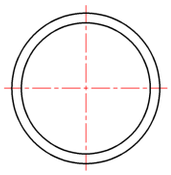		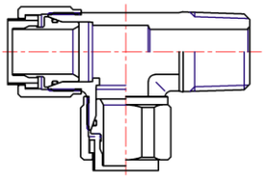		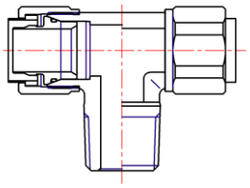	
28	Reducing Union Tee **E1TR**	29	BI-Lok Convesion Tee **E1TY**	30	Union **E1UA**
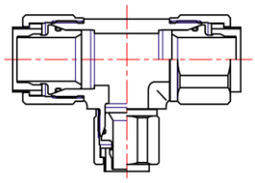		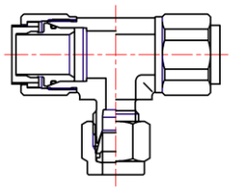		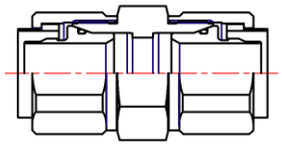	
31	Reducing Union **E1UR**	32	BI-Lok Conversion Union **E1URB**		
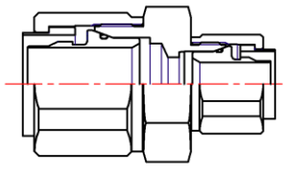		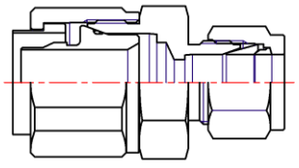			

e1-Touch	E1BA	Plug

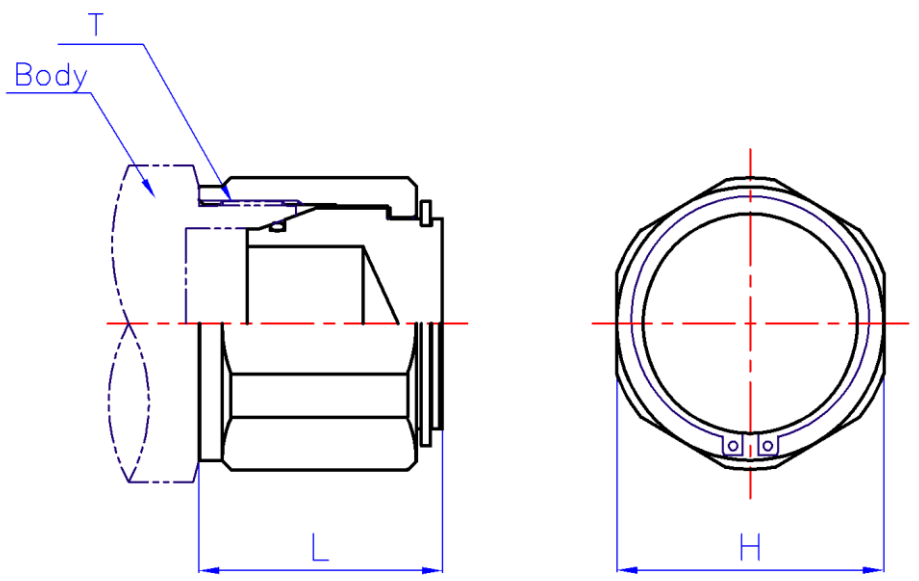

Part No.	T	H (Hex)	L
		mm	mm
E1BA 6X11 ss	3/4-20UN	22	25.1
E1BA 8X13.5 ss	3/4-20UN	22	25.1
E1BA 9X15 ss	7/8-20UN	24	25.6
E1BA 10X16 ss	7/8-20UN	24	25.8
E1BA 12X18 ss	1-20UN	27	27.3
E1BA 15X22 ss	1-1/8-20UN	32	28.5
E1BA 19X26 ss	1-5/16-20UN	36	30.6
E1BA 25X33 ss	1-5/8-20UN	46	41.5
E1BA 32X41 ss	1-15/16-20UN	55	51.4

e1-Touch	E1CA	Cap

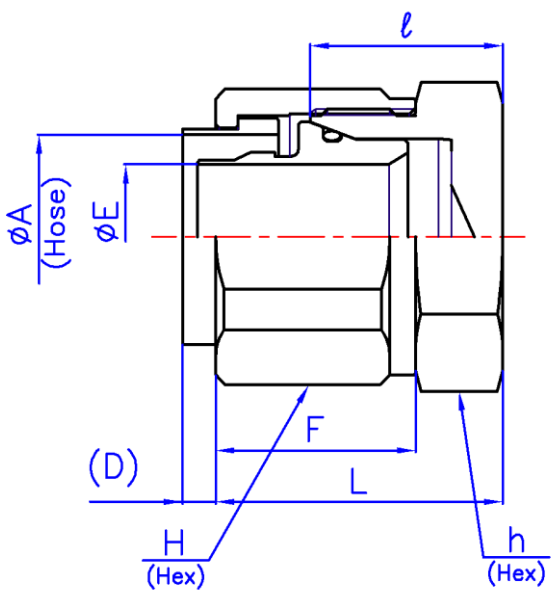

Part No.	A (Hose)	E	h (Hex)		H (Hex)	ℓ	L	F	(D)
	mm	mm	inch	mm	mm	mm	mm	mm	mm
E1CA 6X11 ss	6X11	6	13/16	20.64	22	19.5	29.6	22.0	2.0
E1CA 8X13.5 ss	8X13.5	8	13/16	20.64	22	19.5	29.6	22.0	2.0
E1CA 9X15 ss	9X15	9	15/16	23.81	24	20.0	30.6	22.5	2.5
E1CA 10X16 ss	10X16	10	15/16	23.81	24	20.0	30.6	22.5	2.5
E1CA 12X18 ss	12X18	12	1-1/16	26.99	27	21.5	33.6	24.0	3.0
E1CA 15X22 ss	15X22	15	1-3/16	30.16	32	23.9	37.0	25.0	4.0
E1CA 19X26 ss	19X26	19	1-3/8	34.93	36	26.1	38.9	27.0	4.5
E1CA 25X33 ss	25X33	25	-	-	46	31.0	51.8	37.5	4.0
E1CA 32X41 ss	32X41	31	-	-	55	36.7	63.0	44.0	6.0

e1-Touch	E1CB	Male pipe weld Connector

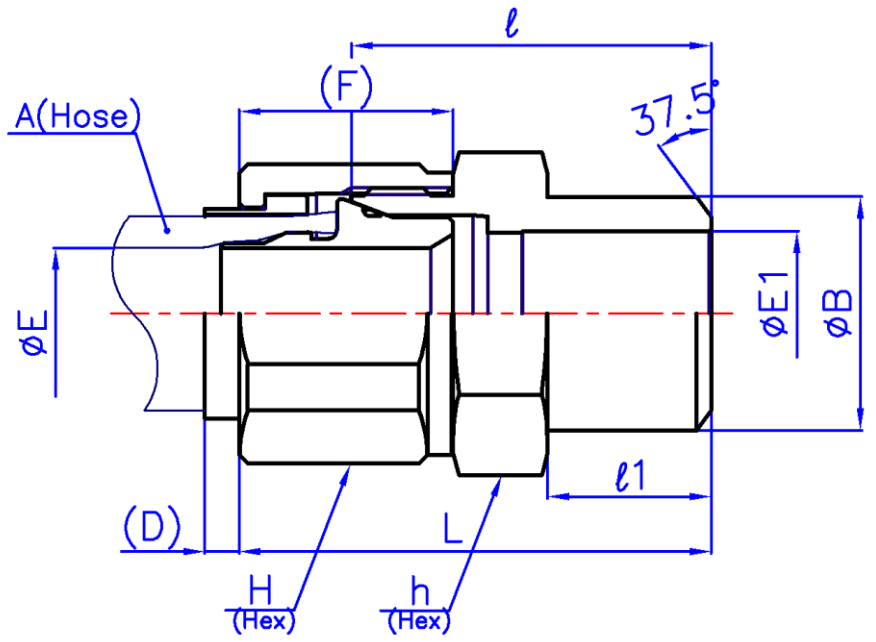

Part No.	A (Hose)	B		E	E1	h (Hex)		H (Hex)	ℓ	ℓ1	L	F	(D)
	mm	nom	mm	mm	mm	inch	mm	mm	mm	mm	mm	mm	mm
E1CB 8X13.5 -8 ss	6 X 11	1/2	21.3	8	13.9	7/8	22.23	22	38.1	19.1	48.2	22	2.0
E1CB 9X15 -6 ss	9 X 15	3/8	17	9	10.4	15/16	23.81	24	34.0	14.2	44.6	22.5	2.5
E1CB 9X15 -8 ss	9 X 15	1/2	21.3	9	13.9	15/16	23.81	24	38.9	19.1	49.5	22.5	2.5
E1CB 10X16 -6 ss	10 X 16	3/8	17	10	10.4	15/16	23.81	24	34.0	14.2	44.6	22.5	2.5
E1CB 10X16 -8 ss	10 X 16	1/2	21.3	10	13.9	15/16	23.81	24	38.9	19.1	49.5	22.5	2.5
E1CB 12X18 -6 ss	12 X 18	3/8	17	12	10.4	1-1/16	26.99	27	35.6	14.2	47.7	24	3.0
E1CB 12X18 -8 ss	12 X 18	1/2	21.3	12	13.9	1-1/16	26.99	27	40.5	19.1	52.6	24	3.0
E1CB 12X18 -12 ss	12 X 18	3/4	26.7	12	18.8	1-1/16	26.99	27	40.6	19.1	52.7	24	3.0
E1CB 12X18 -16 ss	12 X 18	1	33.4	12	24.3	1-3/8	34.93	27	47.6	23.9	59.7	24	3.0
E1CB 15X22 -12 ss	15 X 22	3/4	26.7	15	18.8	1-1/4	31.75	32	42.0	19.1	55.1	25	4.0
E1CB 19X26 -8 ss	19 X 26	1/2	21.3	19	13.9	1-3/8	34.93	36	45.0	19.1	57.8	27	4.5
E1CB 19X26 -12 ss	19 X 26	3/4	26.7	19	18.8	1-3/8	34.93	36	45.3	19.1	58.1	27	4.5
E1CB 19X26 -16 ss	19 X 26	1	33.4	19	24.3	1-3/8	34.93	36	50.0	23.9	62.8	27	4.5
E1CB 25X33 -12 ss	25 X 33	3/4	26.7	25	18.8	-	46	46	50.0	19.1	70.8	37.5	4.5
E1CB 25X33 -16 ss	25 X 33	1	33.4	25	24.3	-	46	46	55.0	23.9	75.8	37.5	4.5

e1-Touch	E1CO	O-ring seal Male Connector

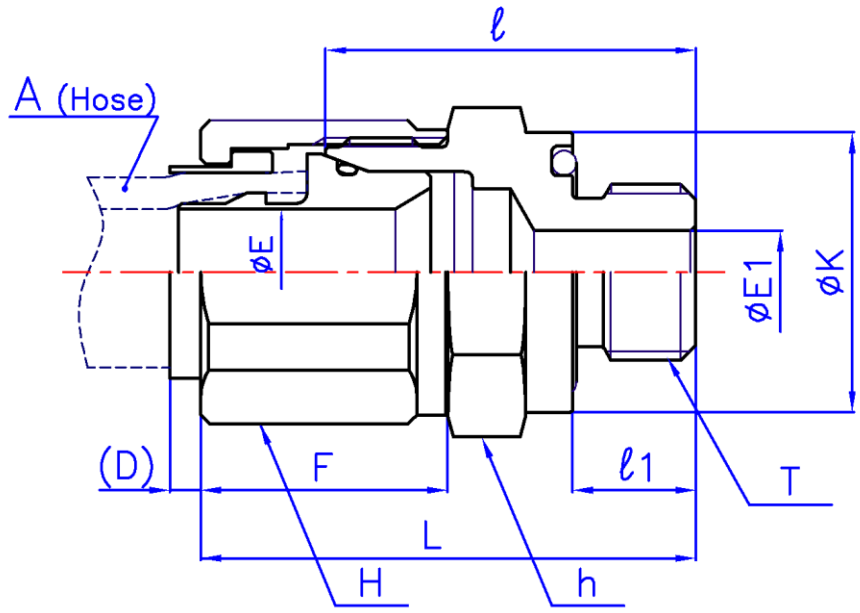

Part No.	A (Hose)	T	E	E1	K	h (Hex)		H (Hex)	ℓ	ℓ1	L	F	(D)	O-ring JIS B 2401 4D-P※
	mm	G	mm	mm	mm	inch	mm	mm	mm	mm	mm	mm	mm	
E1CO 6X11 -G4 ss	6 X 11	1/4	6	6.4	23.5	15/16	23.81	22	35.0	12.0	45.1	22	2	15
E1CO 12X18 -G6 ss	12 X 18	3/8	12	7.9	26.5	1-1/16	26.99	27	36.0	12.0	48.1	24	3	18
E1CO 12X18 -G8 ss	12 X 18	1/2	12	12.0	31.5	1-1/4	31.75	27	42.0	14.0	54.1	24	3	22
E1CO 12X18 -G12 ss	12 X 18	3/4	12	16.0	40.5	1-5/8	41.28	27	45.0	18.0	57.1	24	3	28
E1CO 15X22 -G4 ss	15 X 22	1/4	15	6.4	23.5	1-3/16	30.16	32	38.3	12.0	51.4	25	4	15
E1CO 15X22 -G6 ss	15 X 22	3/8	15	7.9	26.5	1-3/16	30.16	32	38.3	12.0	51.4	25	4	18
E1CO 15X22 -G8 ss	15 X 22	1/2	15	12.0	31.5	1-1/4	31.75	32	42.0	14.0	55.1	25	4	22
E1CO 15X22 -G12 ss	15 X 22	3/4	15	16.0	40.5	1-5/8	41.28	32	45.0	18.0	58.1	25	4	28
E1CO 19X26 -G6 ss	19 X 26	3/8	19	7.9	26.5	1-3/8	34.93	36	42.5	12.0	55.3	27	4.5	18
E1CO 19X26 -G8 ss	19 X 26	1/2	19	12.0	31.5	1-3/8	34.93	36	45.0	14.0	57.8	27	4.5	22
E1CO 19X26 -G12 ss	19 X 26	3/4	19	16.0	40.5	1-5/8	41.28	36	47.0	18.0	59.8	27	4.5	28
E1CO 19X26 -G16 ss	19 X 26	1	19	21.0	49.5	-	50	36	49.0	18.0	61.8	27	4.5	35
E1CO 25X33 -G6 ss	25 X 33	3/8	25	7.9	26.5	-	46	46	45.5	12.0	66.3	37.5	4.5	18
E1CO 25X33 -G8 ss	25 X 33	1/2	25	12.0	31.5	-	46	46	46.0	14.0	66.8	37.5	4.5	22
E1CO 25X33 -G12 ss	25 X 33	3/4	25	16.0	40.5	-	46	46	52.0	18.0	72.8	37.5	4.5	28
E1CO 25X33 -G16 ss	25 X 33	1	25	21.0	49.5	-	50	46	54.0	18.0	74.8	37.5	4.5	35
E1CO 32X41 -G8 ss	32 X 41	3/8	32	12.0	31.5	2-1/8	54	55	54.0	14.0	80.1	44.0	6.0	22
E1CO 32X41 -G12 ss	32 X 41	1/2	32	16.0	40.5	2-1/8	54	55	58.0	18.0	84.1	44.0	6.0	28
E1CO 32X41 -G16 ss	32 X 41	3/4	32	21.0	49.5	2-1/8	54	55	58.0	18.0	84..1	44.0	6.0	35
E1CO 32X41 -G20 ss	32 X 41	1	32	31.0	59.0	-	60	55	60.0	20.0	86.1	44.0	6.0	44

e1-Touch	E1CT	Male Connector ISO/JIS R

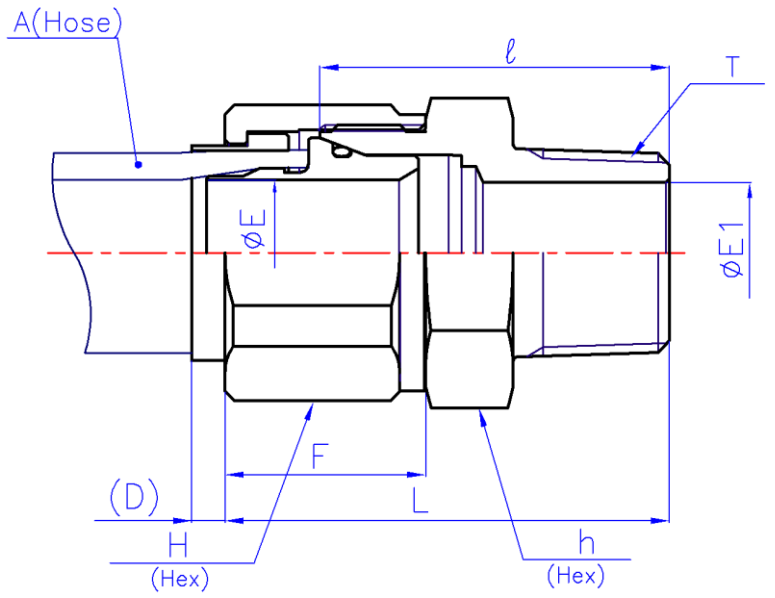

Part No.	A (Hose)	T	E	E1	h (Hex)		H (Hex	ℓ	L	F	(D)
	mm	mm	mm	mm	inch	mm	mm	mm	mm	mm	mm
E1CT 4X9 -R2 ss	4 X 9	1/8	4	4.8	5/8	15.88	17	27.7	37.3	21.5	2.0
E1CT 4X9 -R4 ss	4 X 9	1/4	4	7.1	5/8	15.88	17	32.5	42.1	21.5	2.0
E1CT 4X9 -R6 ss	4 X 9	3/8	4	7.1	11/16	17.46	17	33.5	43.1	21.5	2.0
E1CT 4X9 -R8 ss	4 X 9	1/2	4	7.1	7/8	22.23	17	38.1	47.7	21.5	2.0
E1CT 4X9 -R12 ss	4 X 9	3/4	4	7.1	1-1/16	26.99	17	28.4	50.6	21.5	2.0
E1CT 6X11 -R2 ss	6 X 11	1/8	6	4.8	13/16	20.64	22	28.4	38.5	22	2.0
E1CT 6X11 -R4 ss	6 X 11	1/4	6	7.1	13/16	20.64	22	33.3	43.4	22	2.0
E1CT 6X11 -R6 ss	6 X 11	3/8	6	10.4	13/16	20.64	22	34.3	44.4	22	2.0
E1CT 6X11 -R8 ss	6 X 11	1/2	6	10.4	7/8	22.23	22	38.1	48.2	22	2.0
E1CT 6X11 -R12 ss	6 X 11	3/4	6	10.4	1-1/16	26.99	22	41.0	51.1	22	2.0
E1CT 8X13.5 -R2 ss	8 X 13.5	1/8	8	4.8	13/16	20.64	22	28.4	38.5	22	2.0
E1CT 8X13.5 -R4 ss	8 X 13.5	1/4	8	7.1	13/16	20.64	22	33.3	43.4	22	2.0
E1CT 8X13.5 -R6 ss	8 X 13.5	3/8	8	10.4	13/16	20.64	22	34.3	44.4	22	2.0
E1CT 8X13.5 -R8 ss	8 X 13.5	1/2	8	10.4	7/8	22.23	22	38.1	48.2	22	2.0
E1CT 8X13.5 -R12 ss	8 X 13.5	3/4	8	10.4	1-1/16	26.99	22	41.0	51.1	22	2.0
E1CT 9X15 -R2 ss	9 X 15	1/8	9	4.8	15/16	23.81	24	30.0	40.6	22.5	2.5
E1CT 9X15 -R4 ss	9 X 15	1/4	9	7.1	15/16	23.81	24	34.0	44.6	22.5	2.5
E1CT 9X15 -R6 ss	9 X 15	3/8	9	10.4	15/16	23.81	24	35.0	45.6	22.5	2.5
E1CT 9X15 -R8 ss	9 X 15	1/2	9	12.7	15/16	23.81	24	39.0	49.6	22.5	2.5
E1CT 9X15 -R12 ss	9 X 15	3/4	9	12.7	1-1/16	26.99	24	40.9	51.5	22.5	2.5
E1CT 9X15 -R16 ss	9 X 15	1	9	12.7	1-3/8	34.93	24	46.0	56.6	22.5	2.5
E1CT 10X16 -R2 ss	10 X 16	1/8	10	4.8	15/16	23.81	24	30.0	40.6	22.5	2.5
E1CT 10X16 -R4 ss	10 X 16	1/4	10	7.1	15/16	23.81	24	34.0	44.6	22.5	2.5
E1CT 10X16 -R6 ss	10 X 16	3/8	10	10.4	15/16	23.81	24	35.0	45.6	22.5	2.5
E1CT 10X16 -R8 ss	10 X 16	1/2	10	12.7	15/16	23.81	24	39.0	49.6	22.5	2.5
E1CT 10X16 -R12 ss	10 X 16	3/4	10	12.7	1-1/16	26.99	24	40.9	51.5	22.5	2.5
E1CT 10X16 -R16 ss	10 X 16	1	10	12.7	1-3/8	34.93	24	46.0	56.6	22.5	2.5
E1CT 12X18 -R4 ss	12 X 18	1/4	12	7.1	1-1/16	26.99	27	35.4	47.5	24.0	3.0
E1CT 12X18 -R6 ss	12 X 18	3/8	12	10.4	1-1/16	26.99	27	36.4	48.5	24.0	3.0
E1CT 12X18 -R8 ss	12 X 18	1/2	12	12.7	1-1/16	26.99	27	40.4	52.5	24.0	3.0
E1CT 12X18 -R12 ss	12 X 18	3/4	12	15.8	1-1/16	26.99	27	42.4	54.5	24.0	3.0
E1CT 12X18 -R16 ss	12 X 18	1	12	15.8	1-3/8	34.93	27	47.6	59.7	24.0	3.0
E1CT 12X18 -R20 ss	12 X 18	1-1/4	12	15.8	1-3/4	44.45	27	53.0	65.1	24.0	3.0

Part No.	A (Hose O.D)	T	E	E1	h		H (Hex	ℓ	L	F	(D)
	mm	mm	mm	mm	O.D.	mm	mm	mm	mm	mm	mm
E1CT 15X22 -R2 ss	15 X 22	1/8	15	4.8	1-3/16	30.16.	32	35.4	48.5	25.0	4.0
E1CT 15X22 -R4 ss	15 X 22	1/4	15	7.1	1-3/16	30.16.	32	35.4	48.5	25.0	4.0
E1CT 15X22 -R6 ss	15 X 22	3/8	15	10.4	1-3/16	30.16.	32	36.4	49.5	25.0	4.0
E1CT 15X22 -R8 ss	15 X 22	1/2	15	12.7	1-3/16	30.16.	32	40.4	53.5	25.0	4.0
E1CT 15X22 -R12 ss	15 X 22	3/4	15	18.3	1-3/16	30.16	32	42.4	55.5	25.0	4.0
E1CT 15X22 -R16 ss	15 X 22	1	15	18.3	1-3/8	34.93	32	47.6	60.7	25.0	4.0
E1CT 19X25 -R8 ss	19 X 25	1/2	19	12.7	1-3/8	34.93	36	45.0	57.8	27.0	4.5
E1CT 19X25 -R12 ss	19 X 25	3/4	19	18.3	1-3/8	34.93	36	47.0	59.8	27.0	4.5
E1CT 19X25 -R16 ss	19 X 25	1	19	22.5	1-3/8	34.93	36	50.0	62.8	27.0	4.5
E1CT 19X26 -R2 ss	19 X 26	1/8	19	7.1	1-3/8	34.93	36	42.5	55.3	27.0	4.5
E1CT 19X26 -R4 ss	19 X 26	1/4	19	9.0	1-3/8	34.93	36	43.5	56.3	27.0	4.5
E1CT 19X26 -R6 ss	19 X 26	3/8	19	12.7	1-3/8	34.93	36	45.0	57.8	27.0	4.5
E1CT 19X26 -R8 ss	19 X 26	1/2	19	18.3	1-3/8	34.93	36	47.0	59.8	27.0	4.5
E1CT 19X26 -R12 ss	19 X 26	3/4	19	22.5	1-3/8	34.93	36	50.0	62.8	27.0	4.5
E1CT 19X26 -R16 ss	19 X 26	1	19	22.5	1-3/4	44.45	36	55.0	67.8	27.0	4.5
E1CT 25X32 -R12 ss	25 X 32	3/4	25	18.3	-	46	46	50.0	70.8	37.5	4.5
E1CT 25X32 -R16 ss	25 X 32	1	25	22.5	-	46	46	55.0	75.8	37.5	4.5
E1CT 25X33 -R2 ss	25 X 33	1/8	25	10.4	-	46	46	46.0	66.8	37.5	4.5
E1CT 25X33 -R4 ss	25 X 33	1/4	25	12.7	-	46	46	50.0	70.8	37.5	4.5
E1CT 25X33 -R6 ss	25 X 33	3/8	25	18.3	-	46	46	50.0	70.8	37.5	4.5
E1CT 25X33 -R8 ss	25 X 33	1/2	25	22.5	-	46	46	55.0	75.8	37.5	4.5
E1CT 25X33 -R12 ss	25 X 33	3/4	25	27.8	-	46	46	58.0	78.8	37.5	4.5
E1CT 25X33 -R16 ss	25 X 33	1	25	34.0	2-1/8	54	46	62.5	83.3	37.5	4.5
E1CT 32X41 -R8 ss	32 X 41	1/2	32	12.7	2-1/8	54	55	54.0	80.1	44.0	6.0
E1CT 32X41 -R12 ss	32 X 41	3/4	32	18.3	2-1/8	54	55	56.4	82.5	44.0	6.0
E1CT 32X41 -R16 ss	32 X 41	1	32	22.5	2-1/8	54	55	59.4	85.5	44.0	6.0
E1CT 32X41 -R20 ss	32 X 41	1-1/4	32	27.8	2-1/8	54	55	62.4	88.5	44.0	6.0
E1CT 32X41 -R24 ss	32 X 41	1-1/2	32	34.0	2-1/8	54	55	63.7	89.8	44.0	6.0
E1CT 38X48 -R24 ss	38 X 48	1-1/2	35	27.8	2-3/4	70	76	75.5	108.5	58.4	6.0

e1-Touch	E1CT	Male Connector ANSI/NPT

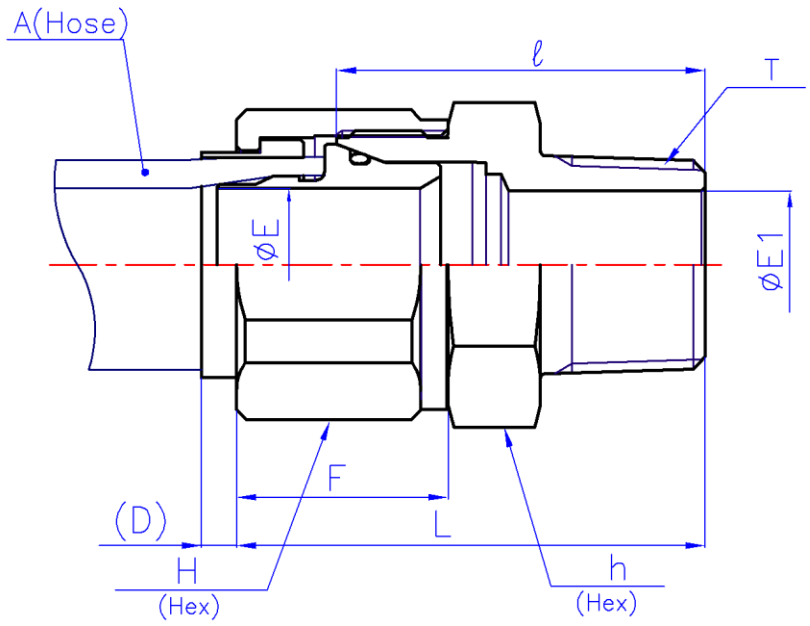

Part No.	A (Hose)	T	E	E1	h (Hex)		H (Hex)	ℓ	L	F	(D)
	mm	mm	mm	mm	inch	mm	mm	mm	mm	mm	mm
E1CT 6X11 -2 ss	6 X 11	1/8	6	4.8	13/16	20.64	22	28.4	38.5	22	2.0
E1CT 6X11 -4 ss	6 X 11	1/4	6	7.1	13/16	20.64	22	33.3	43.4	22	2.0
E1CT 6X11 -6 ss	6 X 11	3/8	6	10.4	13/16	20.64	22	33.3	43.4	22	2.0
E1CT 6X11 -8 ss	6 X 11	1/2	6	10.4	7/8	22.23	22	38.1	48.2	22	2.0
E1CT 6X11 -12 ss	6 X 11	3/4	6	10.4	1-1/16	26.99	22	39.0	49.1	22	2.0
E1CT 6X11 -16 ss	6 X 11	1	6	10.4	1-3/8	34.93	22	47.6	57.7	22	2.0
E1CT 8X13.5 -2 ss	8 X 13.5	1/8	8	4.8	13/16	20.64	22	28.4	38.5	22	2.0
E1CT 8X13.5 -4 ss	8 X 13.5	1/4	8	7.1	13/16	20.64	22	33.3	43.4	22	2.0
E1CT 8X13.5 -6 ss	8 X 13.5	3/8	8	10.4	13/16	20.64	22	33.3	43.4	22	2.0
E1CT 8X13.5 -8 ss	8 X 13.5	1/2	8	10.4	7/8	22.23	22	38.1	48.2	22	2.0
E1CT 8X13.5 -12 ss	8 X 13.5	3/4	8	10.4	1-1/16	26.99	22	39.0	49.1	22	2.0
E1CT 8X13.5 -16 ss	8 X 13.5	1	8	10.4	1-3/8	34.93	22	47.6	57.7	22.0	2.0
E1CT 9X15 -4 ss	9 X 15	1/4	9	7.1	15/16	23.81	24	34.0	44.6	22.5	2.5
E1CT 9X15 -6 ss	9 X 15	3/8	9	10.4	15/16	23.81	24	34.0	44.6	22.5	2.5
E1CT 9X15 -8 ss	9 X 15	1/2	9	12.7	15/16	23.81	24	39.0	49.6	22.5	2.5
E1CT 9X15 -12 ss	9 X 15	3/4	9	12.7	1-1/16	26.99	24	38.9	49.5	22.5	2.5
E1CT 10X16 -4 ss	10 X 16	1/4	10	7.1	15/16	23.81	24	34.0	44.6	22.5	2.5
E1CT 10X16 -6 ss	10 X 16	3/8	10	10.4	15/16	23.81	24	34.0	44.6	22.5	2.5
E1CT 10X16 -8 ss	10 X 16	1/2	10	12.7	15/16	23.81	24	39.0	49.6	22.5	2.5
E1CT 10X16 -12 ss	10 X 16	3/4	10	12.7	1-1/16	26.99	24	38.9	49.5	22.5	2.5
E1CT 12X18 -4 ss	12 X 18	1/4	12	7.1	1-1/16	26.99	27	35.4	47.5	24.0	3.0
E1CT 12X18 -6 ss	12 X 18	3/8	12	10.4	1-1/16	26.99	27	35.4	47.5	24.0	3.0
E1CT 12X18 -8 ss	12 X 18	1/2	12	12.7	1-1/16	26.99	27	40.4	52.5	24.0	3.0
E1CT 12X18 -12 ss	12 X 18	3/4	12	15.8	1-1/16	26.99	27	40.4	52.5	24.0	3.0
E1CT 12X18 -16 ss	12 X 18	1	12	15.8	1-3/8	34.93	27	47.6	59.7	24.0	3.0
E1CT 15X22 -8 ss	15 X 22	1/2	15	12.7	1-3/16	30.16.	32	40.4	53.5	25.0	4.0
E1CT 15X22 -12 ss	15 X 22	3/4	15	18.3	1-3/16	30.16	32	40.4	53.5	25.0	4.0
E1CT 15X22 -16 ss	15 X 22	1	15	18.3	1-3/8	34.93	32	47.6	60.7	25.0	4.0
E1CT 19X26 -8 ss	19 X 26	1/2	19	12.7	1-3/8	34.93	36	45.0	57.8	27.0	4.5
E1CT 19X26 -12 ss	19 X 26	3/4	19	18.3	1-3/8	34.93	36	45.0	57.8	27.0	4.5
E1CT 19X26 -16 ss	19 X 26	1	19	22.5	1-3/8	34.93	36	50.0	62.8	27.0	4.5
E1CT 19X26 -20 ss	19 X 26	1-1/4	19	22.5	1-3/4	44.45	36	50.0	62.8	27.0	4.5
E1CT 19X26 -24 ss	19 X 26	1-1/2	19	22.5	1-3/4	44.45	36	50.0	62.8	27.0	4.5
E1CT 25X33 -16 ss	25 X 33	1	25	34.0	2-1/8	54	46	55.1	75.9	37.5	4.5
E1CT 32X41 -24 ss	32 X 41	1-1/2	32	34.0	2-1/8	54	55	61.7	87.8	44.0	6.0

e1-Touch	E1CU	O-ring seal Male Connector

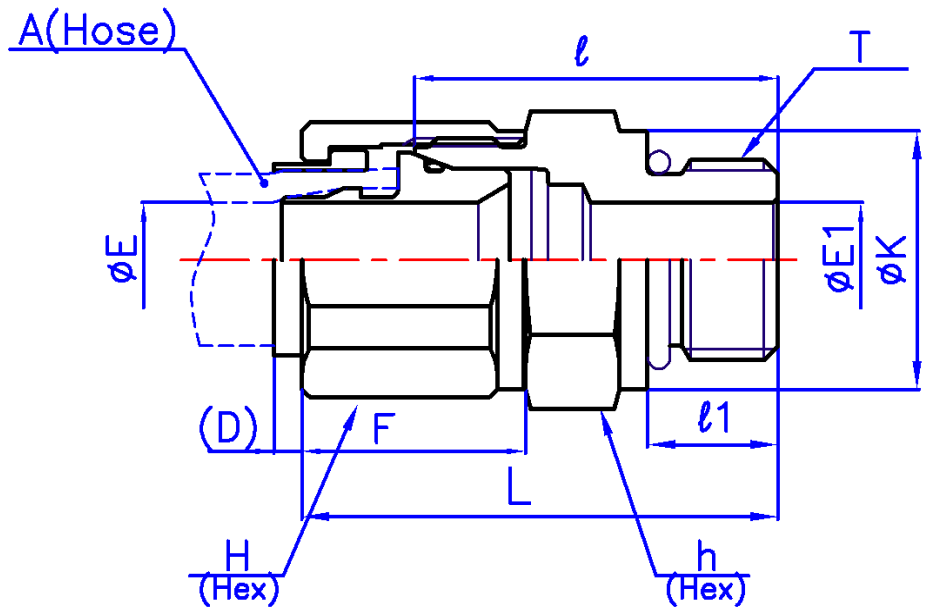

Part No.	A (Hose)	T	E	E1	h (Hex)		H (Hex)	ℓ	ℓ1	L	K	F	(D)	Oリング JIS B 2401 4D-P※
	mm	G	mm	mm	inch	mm	mm	mm	mm	mm		mm	mm	
E1CU 4X9 -G2 ss	4 X 9	1/8	4	4.0	5/8	15.88	17	28.8	8.0	38.4	14.0	21.5	2.0	P8
E1CU 4X9 -G4 ss	4 X 9	1/4	4	6.4	3/4	19.05	17	32.8	12.0	42.4	19.0	21.5	2.0	P11
E1CU 4X9 -G6 ss	4 X 9	3/8	4	7.1	7/8	22.23	17	32.8	12.0	42.4	22.0	21.5	2.0	P14
E1CU 4X9 -G8 ss	4 X 9	1/2	4	12.0	1-1/16	26.99	17	39.0	14.0	48.6	26.5	21.5	2.0	P18
E1CU 6X11 -G2 ss	6 X 11	1/8	6	4.0	13/16	20.64	22	29.0	8.0	39.1	14.0	22.0	2.0	P8
E1CU 6X11 -G4 ss	6 X 11	1/4	6	6.4	13/16	20.64	22	33.0	12.0	43.1	19.0	22.0	2.0	P11
E1CU 6X11 -G6 ss	6 X 11	3/8	6	10.4	7/8	22.23	22	32.8	12.0	42.9	22.0	22.0	2.0	P14
E1CU 6X11 -G8 ss	6 X 11	1/2	6	12.0	1-1/16	26.99	22	39.0	14.0	49.1	26.5	22.0	2.0	P18
E1CU 6X11 -G12 ss	6 X 11	3/4	6	15.8	1-1/4	31.75	22	41.0	16.0	51.1	31.5	22.0	2.0	P24
E1CU 8X13.5 -G2 ss	8 X 13.5	1/8	8	4.0	13/16	20.64	22	29.0	8.0	39.1	14.0	22.0	2.0	P8
E1CU 8X13.5 -G4 ss	8 X 13.5	1/4	8	6.4	13/16	20.64	22	33.0	12.0	43.1	19.0	22.0	2.0	P11
E1CU 8X13.5 -G6 ss	8 X 13.5	3/8	8	10.4	7/8	22.23	22	32.8	12.0	42.9	22.0	22.0	2.0	P14
E1CU 8X13.5 -G8 ss	8 X 13.5	1/2	8	12.0	1-1/16	26.99	22	39.0	14.0	49.1	26.5	22.0	2.0	P18
E1CU 8X13.5 -G12 ss	8 X 13.5	3/4	8	15.8	1-1/4	31.75	22	41.0	16.0	51.1	31.5	22.0	2.0	P24
E1CU 9X15 -G4 ss	9 X 15	1/4	9	4.0	15/16	23.81	24	34.0	12.0	44.6	19.0	22.5	2.5	P11
E1CU 10X16 -G4 ss	10 X 16	1/4	10	6.4	15/16	23.81	24	34.0	12.0	44.6	19.0	22.5	2.5	P11
E1CU 12X18 -G4 ss	12 X 18	1/4	12	6.4	1-1/16	26.99	27	35.8	12.0	47.9	19.0	24.0	3.0	P11
E1CU 12X18 -G6 ss	12 X 18	3/8	12	7.9	1-1/16	26.99	27	33.8	12.0	45.9	22.0	24.0	3.0	P14
E1CU 12X18 -G8 ss	12 X 18	1/2	12	12.0	1-1/16	26.99	27	39.0	14.0	51.1	26.5	24.0	3.0	P18
E1CU 12X18 -G12 ss	12 X 18	3/4	12	15.8	1-1/4	31.75	27	42.7	16.0	54.8	31.5	24.0	3.0	P24
E1CU 15X22 -G8 ss	15 X 22	1/2	15	12.0	1-3/16	30.16	32	39.5	14.0	52.6	26.5	25.0	4.0	P18
E1CU 15X22 -G12 ss	15 X 22	3/4	15	15.8	1-1/4	31.75	32	43.0	16.0	56.1	31.5	25.0	4.0	P24
E1CU 19X26 -G6 ss	19 X 26	3/8	19	7.9	1-3/8	34.93	36	40.0	12.0	52.8	22.0	27.0	4.5	P14
E1CU 19X26 -G8 ss	19 X 26	1/2	19	12.0	1-3/8	34.93	36	43.2	14.0	56.0	26.5	27.0	4.5	P18
E1CU 19X26 -G12 ss	19 X 26	3/4	19	15.8	1-3/8	34.93	36	45.2	16.0	58.0	31.5	27.0	4.5	P24
E1CU 19X26 -G16 ss	19 X 26	1	19	21.0	1-5/8	41.28	36	47.5	18.0	60.3	41.0	27.0	4.5	P29
E1CU 25X33 -G6 ss	25 X 33	3/8	25	7.9	-	46	46	43.0	12.0	63.8	22.0	37.5	4.5	P14
E1CU 25X33 -G8 ss	25 X 33	1/2	25	12.0	-	46	46	46.0	14.0	66.8	26.5	37.5	4.5	P18
E1CU 25X33 -G12 ss	25 X 33	3/4	25	15.8	-	46	46	50.0	16.0	70.8	31.5	37.5	4.5	P24
E1CU 25X33 -G16 ss	25 X 33	1	25	21.0	-	46	46	50.0	18.0	70.8	41.0	37.5	4.5	P29
E1CU 32X41 -G8 ss	32 X 41	1/2	32	12.0	2-1/8	54	55	52.0	14.0	72.8	26.5	44.0	6.0	P18
E1CU 32X41 -G12 ss	32 X 41	3/4	32	15.8	2-1/8	54	55	54.0	16.0	74.8	31.5	44.0	6.0	P24
E1CU 32X41 -G16 ss	32 X 41	1	32	21.0	2-1/8	54	55	56.0	18.0	76.8	41.0	44.0	6.0	P29
E1CU 32X41 -G20 ss	32 X 41	1-1/4	32	31.0	2-1/8	54	55	58.0	20.0	78.8	50.0	44.0	6.0	P38

e1-Touch	E1LA	Union Elbow

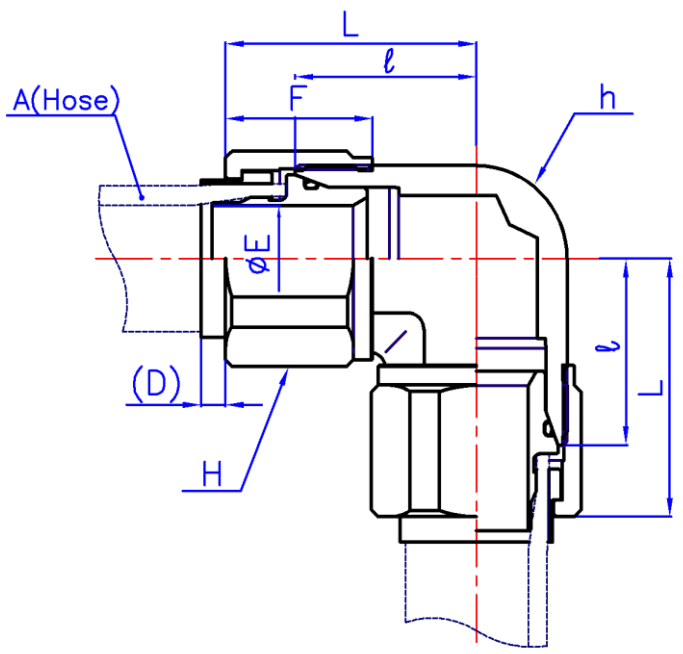

Part No.	A (Hose)	E1	h (Flat)		H (Hex)	ℓ	L	F	(D)
	mm	mm	inch	mm	mm	mm	mm	mm	mm
E1LA 6X11 ss	6X11	6	13/16	20.6	22	25.0	35.1	22.0	2.0
E1LA 8X13.5 ss	8X13.5	8	13/16	20.6	22	25.0	35.1	22.0	2.0
E1LA 9X15 ss	9X15	9	15/16	23.8	24	27.0	37.6	22.5	2.5
E1LA 10X16 ss	10X16	10	15/16	23.8	24	27.0	37.6	22.5	2.5
E1LA 12X18 ss	12X18	12	1-1/16	27.0	27	28.2	40.3	24.0	3.0
E1LA 15X22 ss	15X22	15	1-1/4	31.8	32	32.5	45.6	25.0	4.0
E1LA 19X26 ss	19X26	19	1-5/16	33.3	36	33.3	46.1	27.0	4.5
E1LA 25X33 ss	25X33	25	1-11/16	42.9	46	44.5	65.3	37.5	4.0

e1-Touch	E1LB	Male pipe weld Elbow

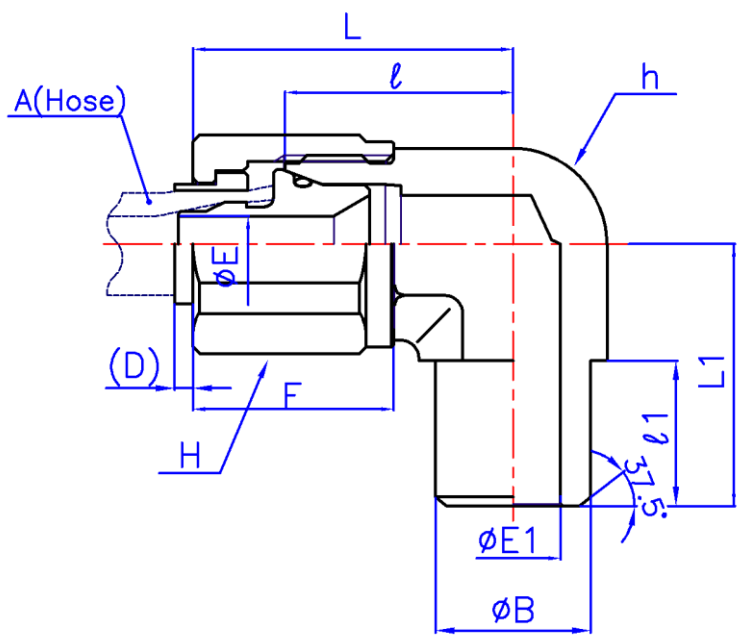

Part No.	A (Hose)	B		E	E1	h (Flat)		H (HEX)	ℓ	ℓ1	L	L1	F	(D)
	mm	inch	mm	inch	mm	inch	mm	mm	mm		mm		mm	mm
E1LB 10X16 ss	10X16	1/2	21.3	12.7	13.9	15/16	23.8	24	27.0	19.1	37.6	33.5	22.5	2.5
E1LB 19X26 ss	19X26	1	33.4	22.5	24.3	1-5/16	33.3	36	33.3	26.7	46.1	46.7	27.0	4.5

e1-Touch	E1LF	Female Elbow

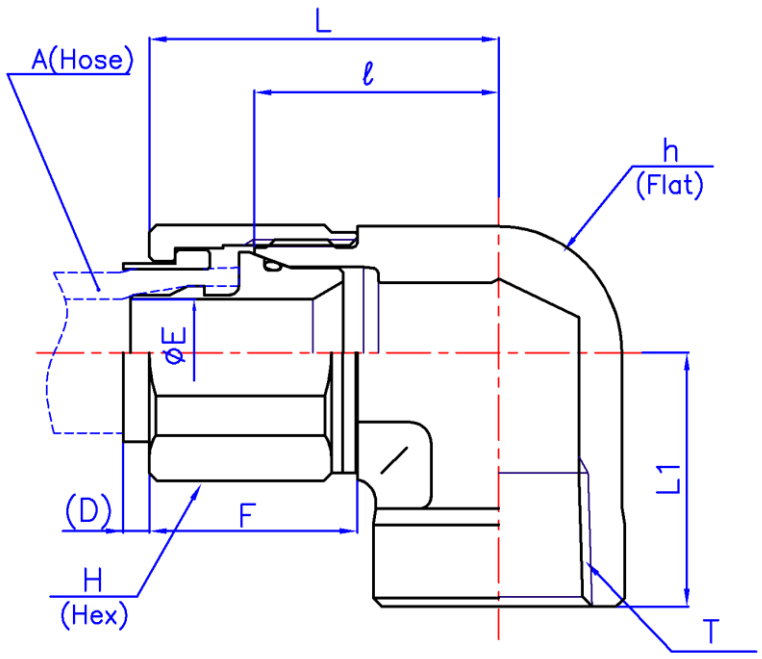

Part No.	A (Hose)	T (Rc)	E	h (Flat)		H (Hex)	ℓ	L	L1	F	(D)
	mm	mm	mm	inch	mm	mm	mm	mm	mm	mm	mm
E1LF 6X11 -R2 ss	6X11	1/4	6	13/16	20.6	22	25.0	35.1	22.5	22.0	2.0
E1LF 6X11 -R4 ss	6X11	3/8	6	15/16	23.8	22	26.2	36.3	22.5	22.0	2.0
E1LF 6X11 -R6 ss	6X11	1/2	6	1-1/16	27.0	22	28.2	38.3	28.5	22.0	2.0
E1LF 8X13.5 -R4 ss	8X13.5	1/4	8	13/16	20.6	22	25.0	35.1	22.5	22.0	2.0
E1LF 8X13.5 -R6 ss	8X13.5	3/8	8	15/16	23.8	22	26.2	36.3	22.5	22.0	2.0
E1LF 8X13.5 -R8 ss	8X13.5	1/2	8	1-1/16	27.0	22	28.2	38.3	28.5	22.0	2.0
E1LF 9X15 -R6 ss	9X15	3/8	9	15/16	23.8	24	27.0	37.6	22.5	22.5	2.5
E1LF 10X16 -R6 ss	10X16	3/8	10	15/16	23.8	24	27.0	37.6	22.5	22.5	2.5
E1LF 10X16 -R8 ss	10X16	1/2	10	1-1/16	27.0	24	28.2	38.8	28.5	22.5	2.5
E1LF 12X18 -R6 ss	12X18	3/8	12	1-1/16	27.0	27	28.2	40.3	28.5	24.0	2.5
E1LF 12X18 -R8 ss	12X18	1/2	12	1-1/16	27.0	27	28.2	40.3	28.5	24.0	3.0
E1LF 15X22 -R4 ss	15X22	1/4	15	1-1/4	31.8	32	32.5	45.6	31.0	25.0	3.0
E1LF 15X22 -R6 ss	15X22	3/8	15	1-1/4	31.8	32	32.5	45.6	31.0	25.0	4.0
E1LF 15X22 -R8 ss	15X22	1/2	15	1-1/4	31.8	32	32.5	45.6	31.0	25.0	4.0
E1LF 15X22 -R12 ss	15X22	3/4	15	1-5/16	33.3	32	32.5	45.6	31.8	25.0	4.0
E1LF 15X22 -R16 ss	15X22	1	15	1-13/16	46.0	32	39.0	52.1	38.1	25.0	4.0
E1LF 19X26 -R6 ss	19X26	3/8	19	1-5/16	33.3	36	33.3	46.1	28.5	27.0	4.5
E1LF 19X26 -R8 ss	19X26	1/2	19	1-5/16	33.3	36	33.3	46.1	33.3	27.0	4.5
E1LF 19X26 -R12 ss	19X26	3/4	19	1-5/16	33.3	36	33.3	46.1	33.3	27.0	4.5
E1LF 19X26 -R16 ss	19X26	1	19	1-13/16	46.0	36	40	52.8	38.1	27.0	4.5
E1LF 19X26 -R20 ss	19X26	1-1/4	19	2-1/8	54.0	36	42.5	55.3	44.5	27.0	4.5
E1LF 19X26 -R24 ss	19X26	1-1/2	19	2-3/8	60.3	36	45.5	58.3	50.8	27.0	4.5
E1LF 25X33 -R6 ss	25X33	3/8	25	1-11/16	42.9	46	44.5	65.3	35.0	37.5	4.0
E1LF 25X33 -R8 ss	25X33	1/2	25	1-11/16	42.9	46	44.5	65.3	35.0	37.5	4.0
E1LF 25X33 -R12 ss	25X33	3/4	25	1-11/16	42.9	46	44.5	65.3	35.0	37.5	4.0
E1LF 25X33 -R16 ss	25X33	1	25	1-7/8	47.6	46	44.5	65.3	39.0	37.5	4.0
E1LF 25X33 -R20 ss	25X33	1-1/4	25	2-1/8	54.0	46	44.5	65.3	44.5	37.5	4.0
E1LF 32X41 -R12 ss	32X41	3/4	31	2-1/8	54.0	55	50.0	76.1	40.5	44.0	6.0
E1LF 32X41 -R16 ss	32X41	1	31	2-1/8	54.0	55	50.0	76.1	40.5	44.0	6.0
E1LF 32X41 -R20 ss	32X41	1-1/4	31	2-1/8	54.0	55	50.0	76.1	44.5	44.0	6.0
E1LF 32X41 -R24 ss	32X41	1-1/2	31	2-3/8	60.3	55	50.0	76.1	50.8	44.0	6.0

e1-Touch	E1LH	Elbow Adapter

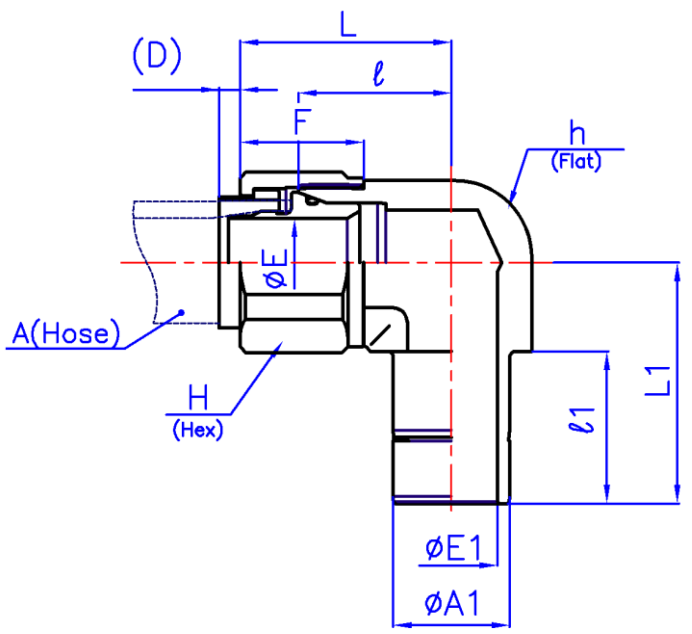

PartNo.	A (Hose)	A1 (TubeO.D.)		E	E1	h (Flat)		H (Hex)	ℓ	ℓ1	L	L1	F	(D)
	mm	inch	mm	mm	mm	inch	mm	mm	mm	mm	mm		mm	mm
E1LH19×26-16ss	19X26	1	25.4	19.0	20.1	1-5/16	33.3	36.0	33.3	32.5	46.1	51.5	27.0	4.5

e1-Touch	E1LN	Elbow Connector ISO/JIS R

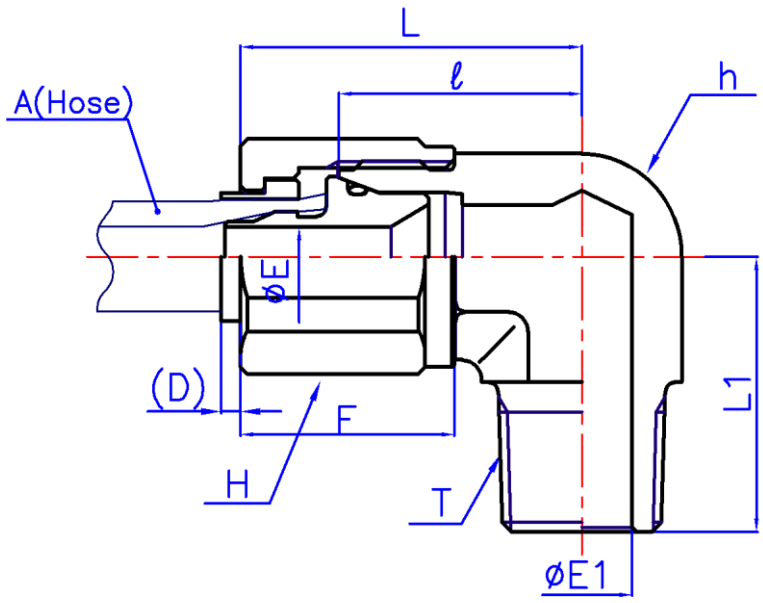

Part No.	A (Hose)	T (R)	E	E1	h (Flat)		H (Hex)	ℓ	L	L1	F	(D)
	mm		mm	mm	inch	mm	mm	mm	mm	mm	mm	mm
E1LN 4X9 -R2 ss	4 X 9	1/8	4	4.8	5/8	15.9	22	23	32.6	19	21.5	2
E1LN 4X9 -R4 ss	4 X 9	1/4	4	6.0	5/8	15.9	22	23	32.6	25.5	21.5	2
E1LN 6X11 -R4 ss	6 X 11	1/4	6	7.1	13/16	20.6	22	25	35.1	27.5	22	2
E1LN 6X11 -R6 ss	6 X 11	3/8	6	10.4	13/16	20.6	22	25	35.1	27.5	22	2
E1LN 6X11 -R8 ss	6 X 11	1/2	6	12.7	13/16	20.6	22	26.2	36.3	33.5	22	2
E1LN 8X13.5 -R2 ss	8 X 13.5	1/8	8	4.8	13/16	20.6	22	25	35.1	23.5	22	2
E1LN 8X13.5 -R4 ss	8 X 13.5	1/4	8	7.1	13/16	20.6	22	25	35.1	27.5	22	2
E1LN 8X13.5 -R6 ss	8 X 13.5	3/8	8	10.4	13/16	20.6	22	25	35.1	27.5	22	2
E1LN 8X13.5 -R8 ss	8 X 13.5	1/2	8	12.7	13/16	20.6	22	26.2	36.3	33.5	22	2
E1LN 9X15 -R4 ss	9 X 15	1/4	9	7.1	15/16	23.8	24	27	37.6	29.5	22.5	2.5
E1LN 9X15 -R6 ss	9 X 15	3/8	9	10.4	15/16	23.8	24	27	37.6	29.5	22.5	2.5
E1LN 9X15 -R8 ss	9 X 15	1/2	9	12.7	15/16	23.8	24	27	37.6	34	22.5	2.5
E1LN 9X15 -R12 ss	9 X 15	3/4	9	18.3	1-1/16	27.0	24	28.2	38.8	37.5	22.5	2.5
E1LN 10X16 -R4 ss	10 X 16	1/4	10	7.1	15/16	23.8	24	27	37.6	29.5	22.5	2.5
E1LN 10X16 -R6 ss	10 X 16	3/8	10	10.4	15/16	23.8	24	27	37.6	29.5	22.5	2.5
E1LN 10X16 -R8 ss	10 X 16	1/2	10	12.7	15/16	23.8	24	27	37.6	34	22.5	2.5
E1LN 10X16 -R12 ss	10 X 16	3/4	10	18.3	1-1/16	27.0	24	28.2	38.8	37.5	22.5	2.5
E1LN 12X18 -R4 ss	12 X 18	1/4	12	7.1	1-1/16	27.0	27	28.2	40.3	30.5	24	3
E1LN 12X18 -R6 ss	12 X 18	3/8	12	10.4	1-1/16	27.0	27	28.2	40.3	30.5	24	3
E1LN 12X18 -R8 ss	12 X 18	1/2	12	12.7	1-1/16	27.0	27	28.2	40.3	35.5	24	3
E1LN 12X18 -R12 ss	12 X 18	3/4	12	18.3	1-1/16	27.0	27	28.2	40.3	37.5	24	3
E1LN 15X22 -R4 ss	15 X 22	1/4	15	7.1	1-1/4	31.8	32	32.5	45.6	34	25	4
E1LN 15X22 -R6 ss	15 X 22	3/8	15	10.4	1-1/4	31.8	32	32.5	45.6	34	25	4
E1LN 15X22 -R8 ss	15 X 22	1/2	15	12.7	1-1/4	31.8	32	32.5	45.6	42	25	4
E1LN 15X22 -R12 ss	15 X 22	3/4	15	18.3	1-1/4	31.8	32	32.5	45.6	44	25	4
E1LN 15X22 -R16 ss	15 X 22	1	15	22.5	1-5/16	33.3	32	33.3	46.4	46.7	25	4
E1LN 19X26 -R4 ss	19 X 26	1/4	19	7.1	1-5/16	33.3	36	33.3	46.1	36	27	4.5
E1LN 19X26 -R6 ss	19 X 26	3/8	19	10.4	1-5/16	33.3	36	33.3	46.1	38	27	4.5
E1LN 19X26 -R8 ss	19 X 26	1/2	19	12.7	1-5/16	33.3	36	33.3	46.1	42	27	4.5
E1LN 19X26 -R12 ss	19 X 26	3/4	19	18.3	1-5/16	33.3	36	33.3	46.1	44	27	4.5
E1LN 19X26 -R16 ss	19 X 26	1	19	22.5	1-5/16	33.3	36	33.3	46.1	46.7	27	4.5
E1LN 19X26 -R20 ss	19 X 26	1-1/4	19	27.8	1-11/16	42.9	36	42.5	55.3	50.8	27	4.5
E1LN 19X26 -R24 ss	19 X 26	1-1/2	19	34.0	2	50.8	36	46.5	59.3	60.5	27	4.5
E1LN 25X33 -R6 ss	25 X 33	3/8	25	10.4	1-11/16	42.9	46	44.5	65.3	41	37.5	4.5
E1LN 25X33 -R8 ss	25 X 33	1/2	25	12.7	1-11/16	42.9	46	44.5	65.3	46.8	37.5	4.5
E1LN 25X33 -R12 ss	25 X 33	3/4	25	18.3	1-11/16	42.9	46	44.5	65.3	47	37.5	4.5
E1LN 25X33 -R16 ss	25 X 33	1	25	22.5	1-11/16	42.9	46	44.5	65.3	47.8	37.5	4.5
E1LN 25X33 -R20 ss	25 X 33	1-1/4	25	27.8	1-11/16	42.9	46	44.5	65.3	50.8	37.5	4.5
E1LN 32X41 -R12 ss	32 X 41	3/4	31	18.3	2	50.8	55	50.8	76.9	54	44	6
E1LN 32X41 -R16 ss	32 X 41	1	31	22.5	2	50.8	55	50.8	76.9	54.8	44	6
E1LN 32X41 -R20 ss	32 X 41	1-1/4	31	27.8	2	50.8	55	50.8	76.9	60.5	44	6
E1LN 32X41 -R24 ss	32 X 41	1/1/2	31	34.0	2	50.8	55	50.8	76.9	60.5	44	6

e1-Touch	E1LN	Elbow Connector ANSI/NPT

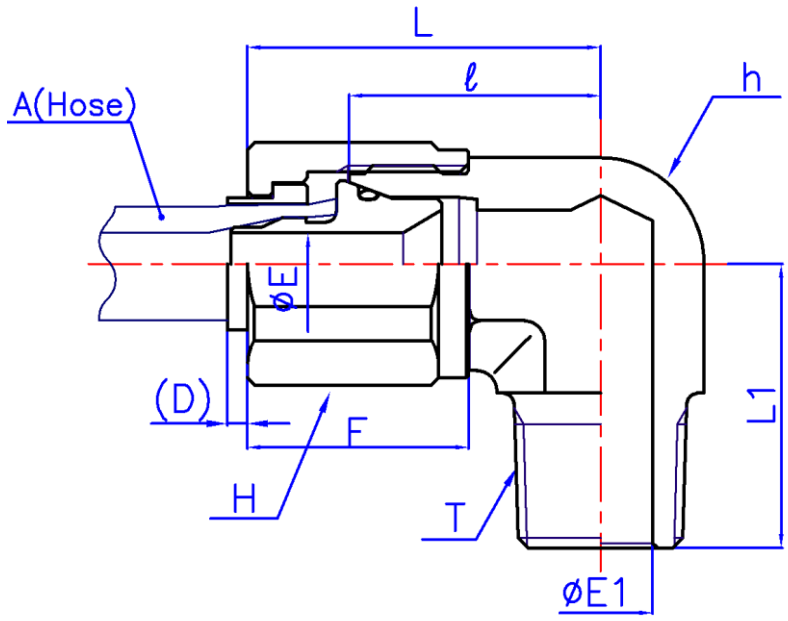

Part No.	A (Hose)	T (NPT)	E	E1	h (Flat)		H (Hex)	ℓ	L	L1	F	(D)
	mm		mm	mm	inch	mm	mm	mm	mm	mm	mm	mm
E1LN 6X11 -4 ss	6 X 11	1/4	6	7.1	13/16	20.6	22	25	34.7	27.5	22	2
E1LN 6X11 -6 ss	6 X 11	3/8	6	10.4	13/16	20.6	22	25	34.7	27.5	22	2
E1LN 6X11 -8 ss	6 X 11	1/2	6	12.7	13/16	20.6	22	26.2	35.9	33.5	22	2
E1LN 8X13.5 -2 ss	8 X 13.5	1/8	8	4.8	13/16	20.6	22	25	35.1	23.5	22	2
E1LN 8X13.5 -4 ss	8 X 13.5	1/4	8	7.1	13/16	20.6	22	25	35.1	27.5	22	2
E1LN 8X13.5 -6 ss	8 X 13.5	3/8	8	10.4	13/16	20.6	22	25	35.1	27.5	22	2
E1LN 8X13.5 -8 ss	8 X 13.5	1/2	8	12.7	13/16	20.6	22	26.2	36.3	33.5	22	2
E1LN 9X15 -4 ss	9 X 15	1/4	9	7.1	15/16	23.8	24	27	37.9	29.5	22.5	2.5
E1LN 9X15 -6 ss	9 X 15	3/8	9	10.4	15/16	23.8	24	27	37.9	29.5	22.5	2.5
E1LN 10X16 -4 ss	10 X 16	1/4	10	7.1	15/16	23.8	24	27	37.5	29.5	22.5	2.5
E1LN 10X16 -6 ss	10 X 16	3/8	10	10.4	15/16	23.8	24	27	37.5	29.5	22.5	2.5
E1LN 10X16 -8 ss	10 X 16	1/2	10	12.7	15/16	23.8	24	27	37.5	34	22.5	2.5
E1LN 12X18 -4 ss	12 X 18	1/4	12	7.1	1-1/16	27.0	27	28.2	40.8	30.5	24	3
E1LN 12X18 -6 ss	12 X 18	3/8	12	10.4	1-1/16	27.0	27	28.2	40.8	30.5	24	3
E1LN 12X18 -8 ss	12 X 18	1/2	12	12.7	1-1/16	27.0	27	28.2	40.8	35.5	24	3
E1LN 12X18 -12 ss	12 X 18	3/4	12	18.3	1-1/16	27.0	27	28.2	40.8	37.5	24	3
E1LN 15X22 -12 ss	15 X 22	3/4	15	18.3	1-1/4	31.8	32	32.5	45.6	44	25	4
E1LN 19X26 -4 ss	19 X 26	1/4	19	7.1	1-5/16	33.3	36	33.3	46.3	36	27	4.5
E1LN 19X26 -6 ss	19 X 26	3/8	19	10.4	1-5/16	33.3	36	33.3	46.3	38	27	4.5
E1LN 19X26 -8 ss	19 X 26	1/2	19	12.7	1-5/16	33.3	36	33.3	46.3	42	27	4.5
E1LN 19X26 -12 ss	19 X 26	3/4	19	18.3	1-5/16	33.3	36	33.3	46.3	44	27	4.5
E1LN 19X26 -16 ss	19 X 26	1	19	22.5	1-5/16	33.3	36	33.3	46.3	46.7	27	4.5

e1-Touch	E1LO	Positional Male Elbow

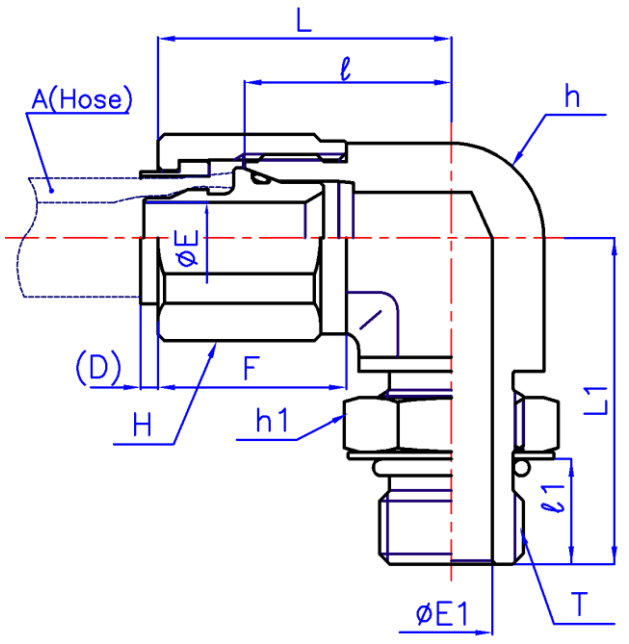

Part No.	A (Hose)	T (R)	E	E1	h (Flat)		h1 (Hex)		H (Hex)	ℓ	ℓ1	L	L1	F	(D)	O-ring JIS B 2401 4D-P※
	mm		mm	mm	inch	mm	inch	mm	mm	mm	mm	mm	mm	mm	mm	
E1LO 6X11 -G4 ss	6X11	1/4	6	6.4	13/16	20.6	3/4	19.05	22	26	9	36.1	35	22	2	11
E1LO 8X13.5 -G4 ss	8X13.5	1/4	8	6.4	13/16	20.6	3/4	19.05	22	26	9	36.1	35	22	2	11
E1LO 9X15 -G4 ss	9X15	1/4	9	6.4	1-1/16	27	3/4	19.05	24	28.2	9	38.8	37.5	22.5	2.5	11
E1LO 10X16 -G4 ss	10X16	1/4	10	6.4	1-1/16	27	3/4	19.05	24	28.2	9	38.8	37.5	22.5	2.5	11
E1LO 12X18 -G8 ss	12X18	1/2	12	12.0	1-1/16	27	1-1/16	26.99	27	28.2	15	40.3	46.5	24	3	18
E1LO 12X18 -G12 ss	12X18	3/4	12	15.8	1-5/16	33.3	-	36	27	32.5	15	44.6	52.5	24	3	24
E1LO 15X22 -G8 ss	15X22	1/2	15	12.0	1-5/16	33.3	1-1/16	26.99	32	32.5	15	45.6	50	25	4	18
E1LO 15X22 -G12 ss	15X22	3/4	15	15.8	1-5/16	33.3	-	36	32	32.5	15	45.6	52.5	25	4	24
E1LO 19X26 -G6 ss	19X26	3/8	19	7.9	1-5/16	33.3	-	22	36	33.3	11.5	46.1	45	27	4.5	14
E1LO 19X26 -G8 ss	19X26	1/2	19	12.0	1-5/16	33.3	1-1/16	26.99	36	33.3	15	46.1	50	27	4.5	18
E1LO 19X26 -G12 ss	19X26	3/4	19	15.8	1-5/16	33.3	-	36	36	33.3	15	46.1	52.5	27	4.5	24

e1-Touch	E1LRB	BI-Lok Conversion Reducing Elbow

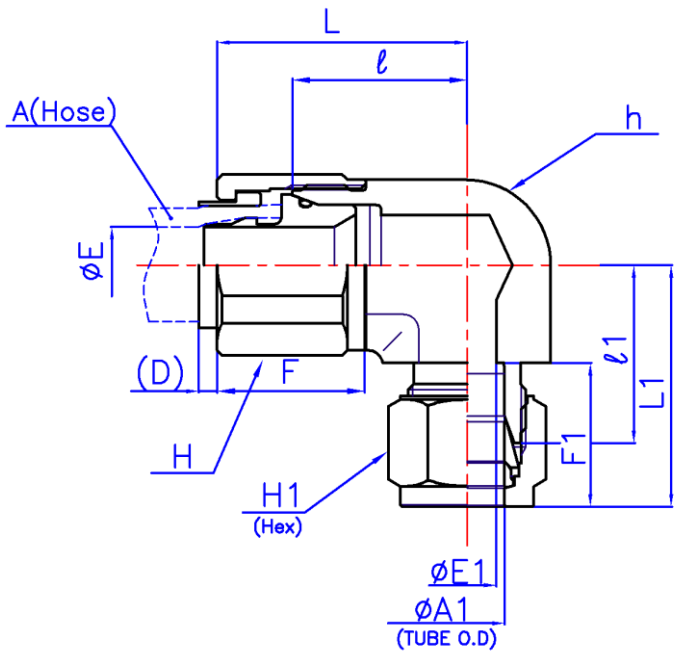

Part No.	A (Hose)	A1 (Tube O.D.)		E	E1	h (Flat)		H (Hex	H1 (Hex)		ℓ	ℓ1	L	L1	F	F1	(D)
	mm	inch	mm	mm	mm	mm	mm	mm	inch	mm	mm	mm	mm	mm	mm	mm	mm
E1LRB 6X11 -4 ss	6X11	1/4	6.35	6	4.8	13/16	20.6	22	9/16	14.29	25	25	35.1	32.5	22	15.4	2
E1LRB 8X13.5 -6 ss	8X13.5	3/8	9.53	8	7.1	13/16	20.6	22	11/16	17.46	25	25	35.1	32.5	22	17	2
E1LRB 8X13.5 -8 ss	8X13.5	1/2	12.7	8	10.4	13/16	20.6	22	7/8	22.23	25	25	35.1	35.3	22	23	2
E1LRB 10X16 -12 ss	10X16	3/4	19.05	10	15.8	1-1/16	27	24	1-1/8	28.58	28.2	28.2	38.8	38.5	22.5	24.6	2.5
E1LRB 12X18 -6 ss	12X18	3/8	9.53	12	7.1	1-1/16	27	27	11/16	17.46	28.2	28.2	40.3	35.7	24	17	3
E1LRB 12X18 -8 ss	12X18	1/2	12.7	12	10.4	1-1/16	27	27	7/8	22.23	28.2	28.2	40.3	38.5	24	23	3
E1LRB 12X18 -12 ss	12X18	3/4	19.05	12	15.8	1-1/16	27	27	1-1/8	28.58	28.2	28.2	40.3	38.5	24	24.6	3
E1LRB 15X22 -8 ss	15X22	1/2	12.7	15	10.4	1-1/4	31.8	32	7/8	22.23	32.5	32.5	45.6	42.8	25	23	4
E1LRB 15X22 -12 ss	15X22	3/4	19.05	15	15.8	1-1/4	31.8	32	1-1/8	28.58	32.5	32.5	45.6	42.8	25	24.6	4
E1LRB 19X26 -6 ss	19X26	3/8	9.53	19	7.1	1-5/16	33.3	36	11/16	17.46	33.3	33.3	46.1	40.8	27	17	4.5
E1LRB 19X26 -8 ss	19X26	1/2	12.7	19	10.4	1-5/16	33.3	36	7/8	22.23	33.3	33.3	46.1	43.6	27	23	4.5
E1LRB 19X26 -12 ss	19X26	3/4	19.05	19	15.8	1-5/16	33.3	36	1-1/8	28.58	33.3	33.3	46.1	43.6	27	24.6	4.5
E1LRB 19X26 -16 ss	19X26	1	25.4	19	22.5	1-5/16	33.3	36	1-1/2	38.1	33.3	33.3	46.1	45.9	27	31.6	4.5

e1-Touch	E1NA	Nut

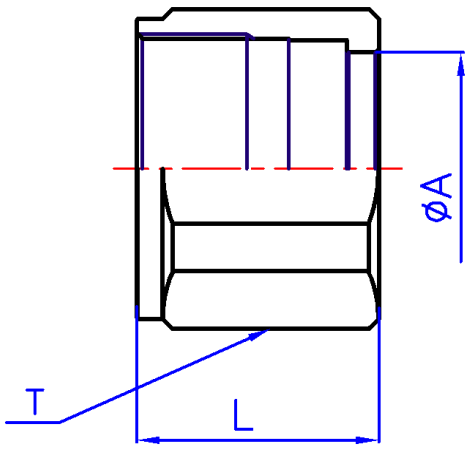

Part No.	A	T	H (Hex)	L
	mm		mm	mm
E1NA 6X11 ss	13.2	3/4-20UN	22	22
E1NA 8X13.5 ss	15.3	3/4-20UN	22	22
E1NA 9X15 ss	17.2	7/8-20UN	24	22.5
E1NA 10X16 ss	18.2	7/8-20UN	24	22.5
E1NA 12X18 ss	20.4	1-20UN	27	24
E1NA 15X22 ss	24.2	1-1/8-20UN	32	25
E1NA 19X25 ss	28.4	1-5/16-20UN	36	27
E1NA 19X26 ss	28.4	1-5/16-20UN	36	27
E1NA 25X32 ss	35.7	1-5/8-20UN	46	37.5
E1NA 25X33 ss	35.7	1-5/8-20UN	46	37.5
E1NA 32X41 ss	44.1	1-15/16-20UN	55	44

e1-Touch	E1OS	Sleeve

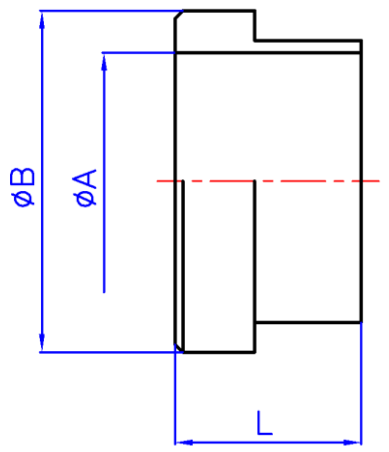

Part No.	A	B	L
	mm	mm	mm
E1OS 6X11 ss	11.5	15.4	8
E1OS 8X13.5 ss	14	17.4	8
E1OS 9X15 ss	15.5	19.5	8.5
E1OS 10X16 ss	16.5	20.3	8.5
E1OS 12X18 ss	18.6	23	10
E1OS 15X22 ss	22.6	26.9	12
E1OS 19X25 ss	25.7	31	13
E1OS 19X26 ss	26.7	31	13
E1OS 25X32 ss	32.75	39	16
E1OS 25X33 ss	33.75	39	16
E1OS 32X41 ss	41.75	47.2	17.5

e1-Touch	E1RE	Reducer

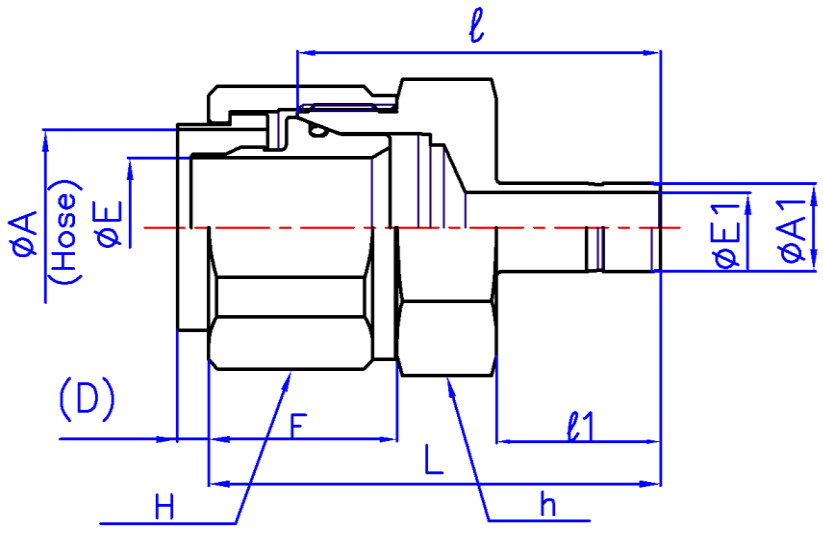

Part No.	A (Hose)	A1 (Tube O.D.)		E	E1	h (Hex)		H (Hex)	ℓ	ℓ1	L	F	(D)
	mm	inch	mm	mm	mm	inch	mm	mm	mm	mm	mm	mm	mm
E1RE 4X9 -2 ss	4X9	1/8	3.18	4	2	5/8	15.88	17	31.5	14	41.1	21.5	2
E1RE 4X9 -3 ss	4X9	3/16	4.76	4	3	5/8	15.88	17	32.3	14.8	41.9	21.5	2
E1RE 4X9 -4 ss	4X9	1/4	6.35	4	4.8	5/8	15.88	17	34	16.5	43.6	21.5	2
E1RE 4X9 -5 ss	4X9	5/16	7.94	4	6.4	5/8	15.88	17	34.7	17.2	44.3	21.5	2
E1RE 4X9 -6 ss	4X9	3/8	9.53	4	7.1	5/8	15.88	17	35.5	18	45.1	21.5	2
E1RE 4X9 -8 ss	4X9	1/2	12.7	4	9.9	5/8	15.88	17	41	23.5	50.6	21.5	2
E1RE 4X9 -10 ss	4X9	5/8	15.88	4	12.7	11/16	17.46	17	42.9	25.2	52.5	21.5	2
E1RE 4X9 -12 ss	4X9	3/4	19.05	4	15	13/16	20.64	17	43	25.2	52.6	21.5	2
E1RE 4X9 -14 ss	4X9	7/8	22.23	4	17.3	15/16	23.81	17	46	27	55.6	21.5	2
E1RE 4X9 -16 ss	4X9	1	25.4	4	20.1	1-1/16	26.99	17	50	32.5	59.6	21.5	2
E1RE 6x11 -4 ss	6x11	1/4	6.35	6	4.8	13/16	20.64	22	35.5	16.5	45.6	22	2
E1RE 6x11 -6 ss	6x11	3/8	9.53	6	7.1	13/16	20.64	22	37	18	47.1	22	2
E1RE 6x11 -8 ss	6x11	1/2	12.7	6	9.9	13/16	20.64	22	42.5	23.5	52.6	22	2
E1RE 6x11 -10 ss	6x11	5/8	15.88	6	12.7	13/16	20.64	22	43.7	25.2	53.8	22	2
E1RE 6x11 -12 ss	6x11	3/4	19.05	6	15	13/16	20.64	22	43.7	25.2	53.8	22	2
E1RE 6x11 -16 ss	6x11	1	25.4	6	20.1	1-1/16	26.99	22	50	32.5	60.1	22	2
E1RE 8x13.5 -4 ss	8x13.5	1/4	6.35	8	4.8	13/16	20.64	22	35.5	16.5	45.6	22	2
E1RE 8x13.5 -6 ss	8x13.5	3/8	9.53	8	7.1	13/16	20.64	22	37	18	47.1	22	2
E1RE 8x13.5 -8 ss	8x13.5	1/2	12.7	8	9.9	13/16	20.64	22	42.5	23.5	52.6	22	2
E1RE 8x13.5 -10 ss	8x13.5	5/8	15.88	8	12.7	13/16	20.64	22	43.7	25.2	53.8	22	2
E1RE 8x13.5 -12 ss	8x13.5	3/4	19.05	8	15	13/16	20.64	22	43.7	25.2	53.8	22	2
E1RE 8x13.5 -16 ss	8x13.5	1	25.4	8	20.1	1-1/16	26.99	22	50	32.5	60.1	22	2
E1RE 9x15 -8 ss	9x15	1/2	12.7	9	9.9	15/16	23.81	24	43	23.5	53.6	22.5	3
E1RE 9x15 -12 ss	9x15	3/4	19.05	9	15	15/16	23.81	24	44.5	25.2	55.1	22.5	3
E1RE 9x15 -14 ss	9x15	7/8	22.23	9	17.3	15/16	23.81	24	46	27	56.6	22.5	3
E1RE 9x15 -16 ss	9x15	1	25.4	9	20.1	1-1/16	26.99	24	51.5	32.5	62.1	22.5	3
E1RE 10x16 -8 ss	10x16	1/2	12.7	10	9.9	15/16	23.81	24	43	23.5	53.6	22.5	3
E1RE 10x16 -12 ss	10x16	3/4	19.05	10	15	15/16	23.81	24	44.5	25.2	55.1	22.5	3
E1RE 10x16 -14 ss	10x16	7/8	22.23	10	17.3	15/16	23.81	24	46	27	56.6	22.5	3
E1RE 10x16 -16 ss	10x16	1	25.4	10	20.1	1-1/16	26.99	24	51.5	32.5	62.1	22.5	3
E1RE 12x18 -4 ss	12x18	1/4	6.35	12	4.8	1-1/16	26.99	27	37.9	16.5	50	24	3
E1RE 12x18 -6 ss	12x18	3/8	9.53	12	7.1	1-1/16	26.99	27	39.4	18	51.5	24	3
E1RE 12x18 -8 ss	12x18	1/2	12.7	12	9.9	1-1/16	26.99	27	45.5	23.5	57.6	24	3
E1RE 12x18 -10 ss	12x18	5/8	15.88	12	12.7	1-1/16	26.99	27	46	25.2	58.1	24	3
E1RE 12x18 -12 ss	12x18	3/4	19.05	12	15	1-1/16	26.99	27	46	25.2	58.1	24	3
E1RE 12x18 -14 ss	12x18	7/8	22.23	12	17.3	1-1/16	26.99	27	47	27	59.1	24	3
E1RE 12x18 -16 ss	12x18	1	25.4	12	20.1	1-1/16	26.99	27	52.5	32.5	64.6	24	3
E1RE 15x22 -6 ss	15x22	3/8	9.53	15	7.1	1-3/16	30.16	32	41.5	18	54.6	25	4
E1RE 15x22 -8 ss	15x22	1/2	12.7	15	9.9	1-3/16	30.16	32	47	23.5	60.1	25	4
E1RE 15x22 -12 ss	15x22	3/4	19.05	15	15	1-3/16	30.16	32	48.3	25.2	61.4	25	4
E1RE 19x26 -8 ss	19x26	1/2	12.7	19	9.9	1-3/8	34.93	36	51.5	23.5	64.3	27	5
E1RE 19x26 -12 ss	19x26	3/4	19.05	19	15	1-3/8	34.93	36	53.2	25.2	66	27	5
E1RE 19x26 -14 ss	19x26	7/8	22.23	19	17.3	1-3/8	34.93	36	53.2	27	66	27	5
E1RE 19x26 -16 ss	19x26	1	25.4	19	20.1	1-3/8	34.93	36	58.5	32.5	71.3	27	5
E1RE 19x26 -20 ss	19x26	1-1/4	31.75	19	27.8	1-3/8	34.93	36	68.3	43	81.1	27	5
E1RE 25x33 -16 ss	25x33	1	25.4	25	20.1	1-13/16	46	46	63.5	32.5	84.3	37.5	5

e1-Touch	E1SA	Female Connector

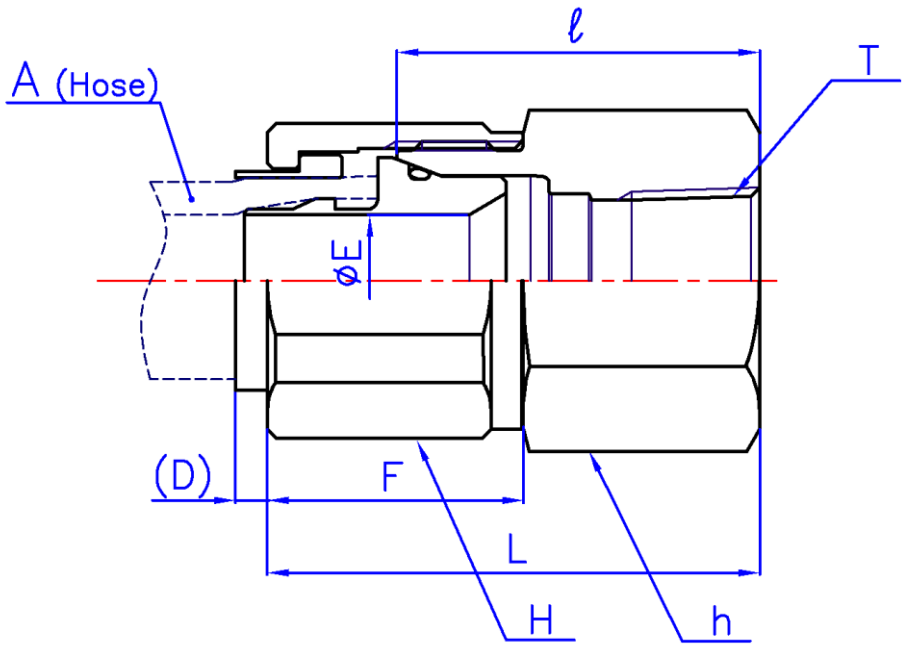

Part No.	A (Hose)	T (R)	E	h (Hex)		H (Hex)	ℓ	L	F	(D)
	mm	inch	mm	inch	mm	mm	mm	mm	mm	mm
E1SA 6X11 -R4ss	6X11	1/4	6	13/16	20.64	22	31.9	42	22	2
E1SA 6X11 -R6ss	6X11	3/8	6	7/8	22.23	22	32.9	43	22	2
E1SA 6X11 -R8ss	6X11	1/2	6	1-1/16	26.99	22	36.6	46.7	22	2
E1SA 8X13.5 -R4ss	8X13.5	1/4	8	13/16	20.64	22	31.9	42	22	2
E1SA 8X13.5 -R6ss	8X13.5	3/8	8	7/8	22.23	22	32.9	43	22	2
E1SA 8X13.5 -R8ss	8X13.5	1/2	8	1-1/16	26.99	22	36.6	46.7	22	2
E1SA 9X15 -R4ss	9X15	1/4	9	15/16	23.81	24	31.9	42.5	22.5	2.5
E1SA 9X15 -R6ss	9X15	3/8	9	15/16	23.81	24	32	42.6	22.5	2.5
E1SA 9X15 -R8ss	9X15	1/2	9	1-1/16	26.99	24	36.6	47.2	22.5	2.5
E1SA 10X16 -R4ss	10X16	1/4	10	15/16	23.81	24	31.9	42.5	22.5	2.5
E1SA 10X16 -R6ss	10X16	3/8	10	15/16	23.81	24	32	42.6	22.5	2.5
E1SA 10X16 -R8ss	10X16	1/2	10	1-1/16	26.99	24	36.6	47.2	22.5	2.5
E1SA 12X18 -R4ss	12X18	1/4	12	1-1/16	26.99	27	31.8	43.9	24	3
E1SA 12X18 -R6ss	12X18	3/8	12	1-1/16	26.99	27	34	46.1	24	3
E1SA 12X18 -R8ss	12X18	1/2	12	1-1/16	26.99	27	36.6	48.7	24	3
E1SA 12X18 -R12ss	12X18	3/4	12	1-5/16	33.34	27	40.1	52.2	24	3
E1SA 15X22 -R6ss	15X22	3/8	15	1-1/4	31.75	32	36	49.1	25	4
E1SA 15X22 -R8ss	15X22	1/2	15	1-1/4	31.75	32	39	52.1	25	4
E1SA 15X22 -R12ss	15X22	3/4	15	1-5/16	33.34	32	41	54.1	25	4
E1SA 19X26 -R8ss	19X26	1/2	19	1-3/8	34.93	36	41.1	53.9	27	4.5
E1SA 19X26 -R12ss	19X26	3/4	19	1-3/8	34.93	36	42.1	54.9	27	4.5
E1SA 19X26 -R16ss	19X26	1	19	1-5/8	41.28	36	50	62.8	27	4.5
E1SA 32X41 -R12ss	32X41	3/4	32	2-1/8	54	55	51.5	77.6	44	6

e1-Touch	E1SC	Bulkhead Male Connector

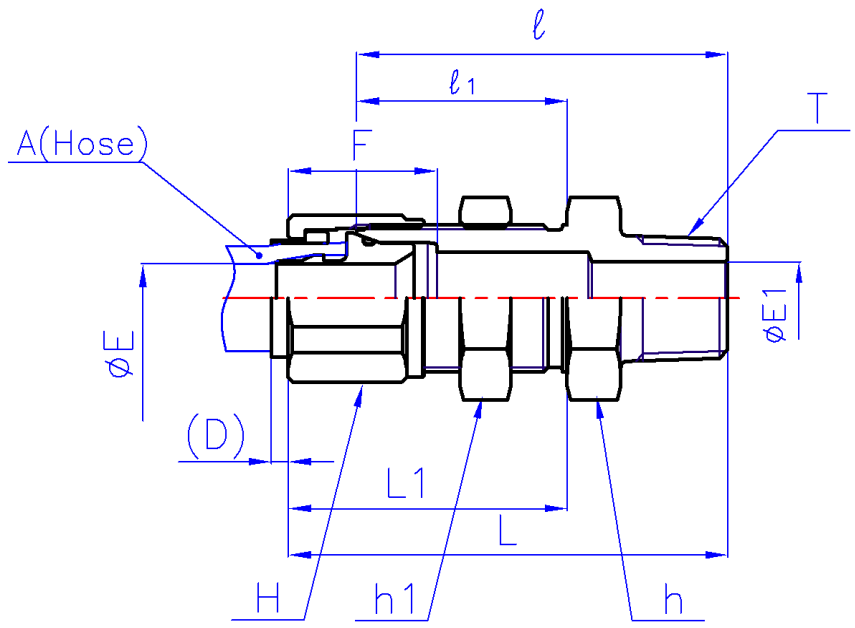

Part No.	A (Hose)	T (R)	E	E1	h (Hex)		h1 (Hex)		H	ℓ	ℓ1	L	L1	F
	mm	mm	mm	mm	inch	mm	inch	mm	mm	mm	mm	mm	mm	mm
E1SC 6X11 -R4 ss	6X11	1/4	6	7.1	15/16	23.81	15/16	23.81	22	53.4	32	63.5	42.1	22
E1SC 6X11 -R6 ss	6X11	3/8	6	10.4	15/16	23.81	15/16	23.81	22	54	32	64.1	42.1	22
E1SC 6X11 -R8 ss	6X11	1/2	6	10.4	15/16	23.81	15/16	23.81	22	58	32	68.1	42.1	22
E1SC 6X11 -R12 ss	6X11	3/4	6	10.4	1-1/16	26.99	15/16	23.81	22	61.1	32	71.2	42.1	22
E1SC 8X13.5 -R4 ss	8X13.5	1/4	8	7.1	15/16	23.81	15/16	23.81	22	53.4	32	63.5	42.1	22
E1SC 8X13.5 -R6 ss	8X13.5	3/8	8	10.4	15/16	23.81	15/16	23.81	22	54	32	64.1	42.1	22
E1SC 8X13.5 -R8 ss	8X13.5	1/2	8	10.4	15/16	23.81	15/16	23.81	22	58	32	68.1	42.1	22
E1SC 8X13.5 -R12 ss	8X13.5	3/4	8	10.4	1-1/16	26.99	15/16	23.81	22	61.1	32	71.2	42.1	22
E1SC 10X16 -R6 ss	10X16	3/8	10	10.4	1-1/16	26.99	1-1/16	26.99	24	55.6	32.5	66.2	43.1	22.5
E1SC 10X16 -R8 ss	10X16	1/2	10	12.7	1-1/16	26.99	1-1/16	26.99	24	59.6	32.5	70.2	43.1	22.5
E1SC 12X18 -R8 ss	12X18	1/2	12	12.7	1-3/16	30.16	1-3/16	30.16	27	65.8	37.3	77.9	49.4	24
E1SC 12X18 -R12 ss	12X18	3/4	12	15.8	1-3/16	30.16	1-3/16	30.16	27	67.8	37.3	79.9	49.4	24
E1SC 19X26 -R12 ss	19X26	3/4	19	18.3	1-5/8	41.28	1-5/8	41.28	36	78	45.2	90.8	58	27
E1SC 19X26 -R16 ss	19X26	1	19	22.5	1-5/8	41.28	1-5/8	41.28	36	81	45.2	93.8	58	27

e1-Touch	E1SL	Bulkhead Union Elbow

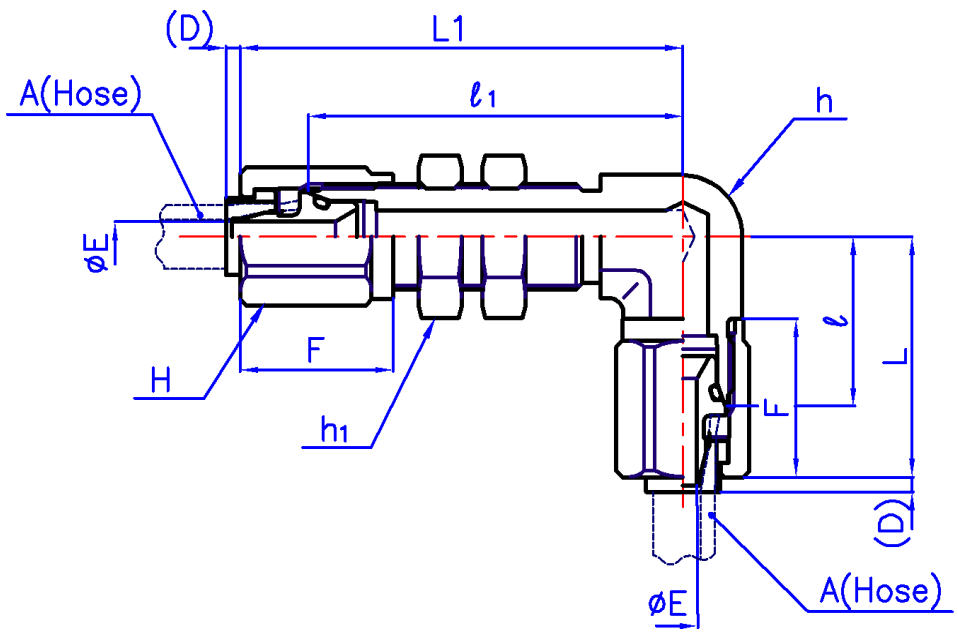

Part No.	A (Hose)	E	h (Flat)		h1 (Hex)		H (Hex)	ℓ	ℓ1	L	L1	F	(D)
	mm	mm	inch	mm	inch	mm	mm	mm	mm	mm	mm	mm	mm
E1SL 10X16 ss	10X16	10	15/16	23.8	1-1/16	26.99	24	27	61.5	37.6	72.1	22.5	2.5
E1SL 12X18 ss	12X18	12	1-1/16	26.99	1-3/16	30.16	27	28.2	68	40.3	80.1	24	3
E1SL 15X22 ss	15X22	15	1-1/4	31.75	1-3/8	34.93	32	32.5	78.6	45.6	91.7	25	4
E1SL 19X26 ss	19X26	19	1-3/8	34.93	1-5/8	41.28	36	33.3	81.2	46.1	94	27	4.5
E1SL 25X33 ss	25X33	25	1-11/16	42.86	1-7/8	47.63	46	44.5	95.5	65.3	116.3	37.5	4.5

e1-Touch	E1SS	Bulkhead Female Connector

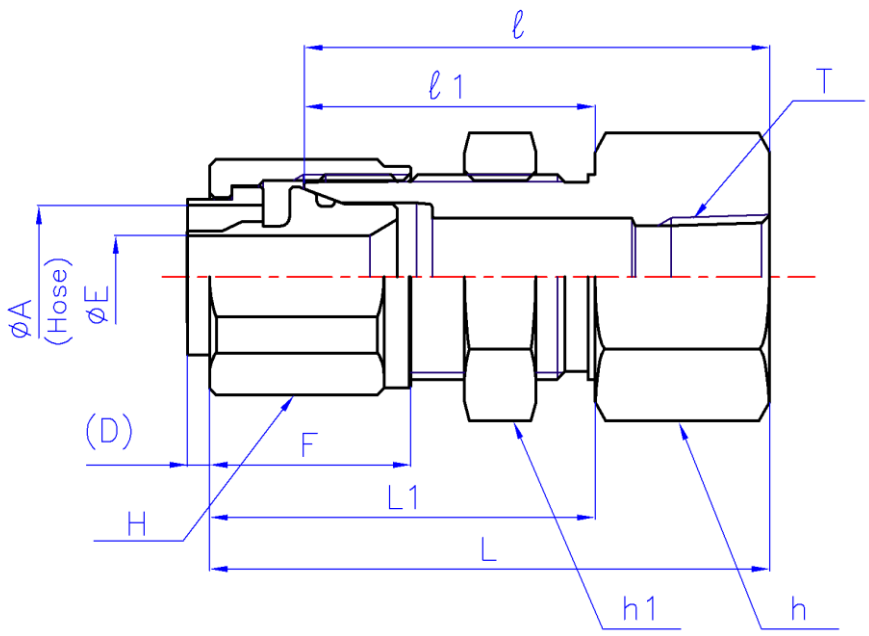

Part No.	A (Hose)	T (R)	E	h (Hex)		h1 (Hex)		H (Hex)	ℓ	ℓ1	L	L1	F
	mm		mm	inch	mm	inch	mm	mm	mm	mm	mm	mm	mm
E1SS 8X13.5 -R6 ss	8X13.5	3/8	8	15/16	23.81	15/16	23.81	22	52.5	32	62.6	42.1	22
E1SS 8X13.5 -R8 ss	8X13.5	1/2	8	1-1/16	26.99	15/16	26.99	22	56.5	32	66.6	42.1	22
E1SS 9X15 -R4 ss	9X15	1/4	9	1-1/16	26.99	1-1/16	26.99	24	52	32.5	62.6	43.1	22.5
E1SS 10X16 -R6 ss	10X16	3/8	10	1-1/16	26.99	1-1/16	26.99	24	53.5	32.5	64.1	43.1	22.5
E1SS 10X16 -R12 ss	10X16	3/4	10	1-5/16	33.34	1-1/16	26.99	24	61.5	32.5	72.1	43.1	22.5
E1SS 12X18 -R12 ss	12X18	3/4	12	1-5/16	33.34	1-3/16	33.34	27	65.5	37.3	77.6	49.4	24
E1SS 15X22 -R6 ss	15X22	3/8	15	1-3/8	34.93	1-3/8	34.93	32	64.2	42	77.3	55.1	25
E1SS 15X22 -R8 ss	15X22	1/2	15	1-3/8	34.93	1-3/8	34.93	32	69.1	42	82.2	55.1	25

e1-Touch	E1SU	Bulkhead Union

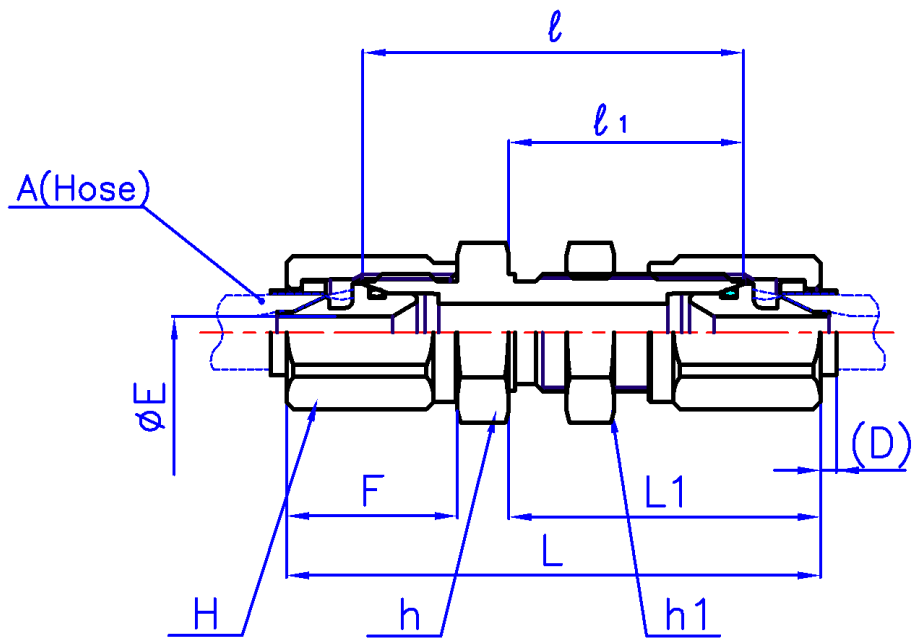

Part No.	A (Hose)	E	h (Hex)		h1 (Hex)		H (Hex)	ℓ	ℓ1	L	L1	F	(D)
	mm	mm	inch	mm	inch	mm	mm	mm	mm	mm	mm	mm	mm
E1SU 4X9 ss	4X9	4	3/4	19.05	3/4	19.05	17	47.8	29.5	67	39.1	21.5	2
E1SU 6X11 ss	6X11	6	15/16	23.81	15/16	23.81	22	50.8	32	71	42.1	22	2
E1SU 8X13.5 ss	8X13.5	8	15/16	23.81	15/16	23.81	22	50.8	32	71	42.1	22	2
E1SU 9X15 ss	9X15	9	1-1/16	26.99	1-1/16	26.99	24	52.5	32.5	73.7	43.1	22.5	2.5
E1SU 10X16 ss	10X16	10	1-1/16	26.99	1-1/16	26.99	24	52.5	32.5	73.7	43.1	22.5	2.5
E1SU 12X18 ss	12X18	12	1-3/16	30.16	1-3/16	30.16	27	58.7	37.3	82.9	49.4	24	3
E1SU 15X22 ss	15X22	15	1-5/16	34.93	1-5/16	34.93	32	63.4	42	89.6	55.1	25	4
E1SU 19X26 ss	19X26	19	1-5/8	41.28	1-5/8	41.28	36	71.4	45.2	97	58	27	4.5
E1SU 25X33 ss	25X33	25	1-7/8	47.63	1-7/8	47.63	46	79	47.8	120.6	68.6	37.5	4.5
E1SU 32X41 ss	32X41	32	2-1/4	57.15	2-1/4	57.15	55	84.8	49.3	137	75.4	44	6

e1-Touch	E1SUY	BI-Lok Conversion Bulkhead Union

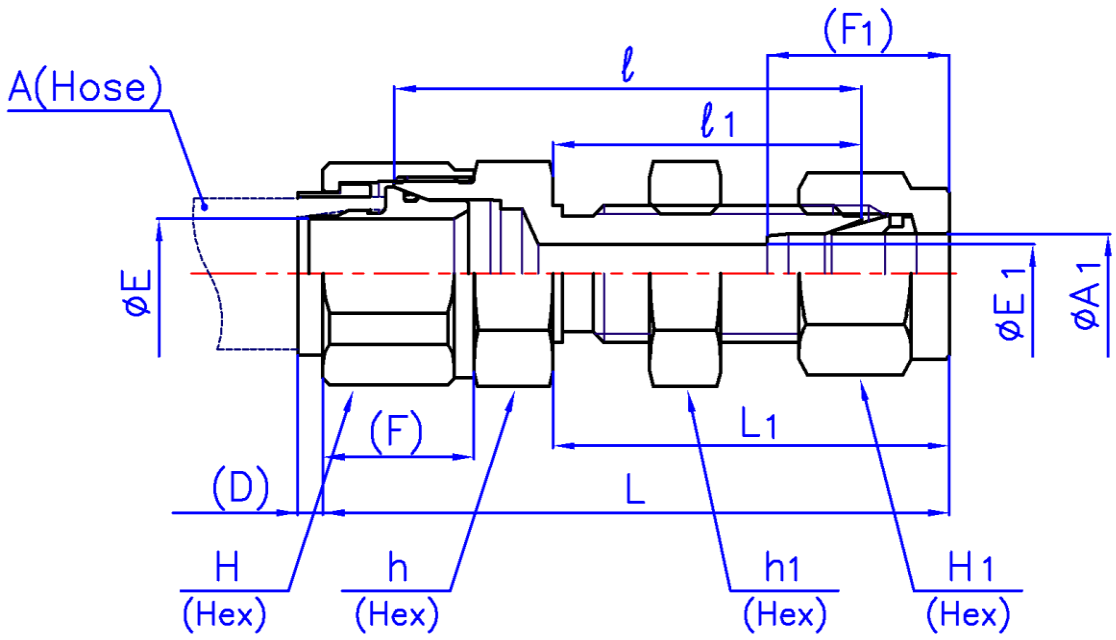

Part No.	A (Hose)	A1 (Tube O.D.)		E	E1	h (Hex)		h1 (Hex)		H (Hex)	H1 (Hex)		ℓ	ℓ1	L
	mm	inch	mm	mm	mm	inch	mm	inch	mm	mm	inch	mm	mm	mm	mm
E1SUY 9X15 -6 ss	9X15	3/8	9.53	9	7.1	1-1/16	26.99	3/4	19.05	24	11/16	17.46	49.5	29.5	67.6
E1SUY 12X18 -8 ss	12X18	1/2	12.7	12	10.4	1-1/16	26.99	15/16	23.81	27	7/8	22.23	53.4	32	75.8
E1SUY 15X22 -8 ss	15X22	1/2	12.7	15	10.4	1-3/16	30.16	15/16	23.81	32	7/8	22.23	55	32	78.4
E1SUY 15X22 -12 ss	15X22	3/4	19.05	15	15.8	1-3/16	30.16	1-3/16	30.16	32	1-1/8	28.58	60.3	37.3	83.7
E1SUY 19X26 -12 ss	19X26	3/4	19.05	19	15.8	1-3/8	34.93	1-3/16	30.16	36	1-1/8	28.58	62.7	37.3	85.8
E1SUY 19X26 -16 ss	19X26	1	25.4	19	22.5	1-5/8	41.28	1-5/8	41.28	36	1-1/2	38.1	71.4	45.2	96.8

L1	F	F1	(D)
mm	mm	mm	mm
37	22.5	17	2.5
42.3	24	23	3
42.3	25	23	4
47.6	25	24.6	4
47.6	27	24.6	4.5
57.8	27	31.6	4.5

e1-Touch	E1TA	Union Tee

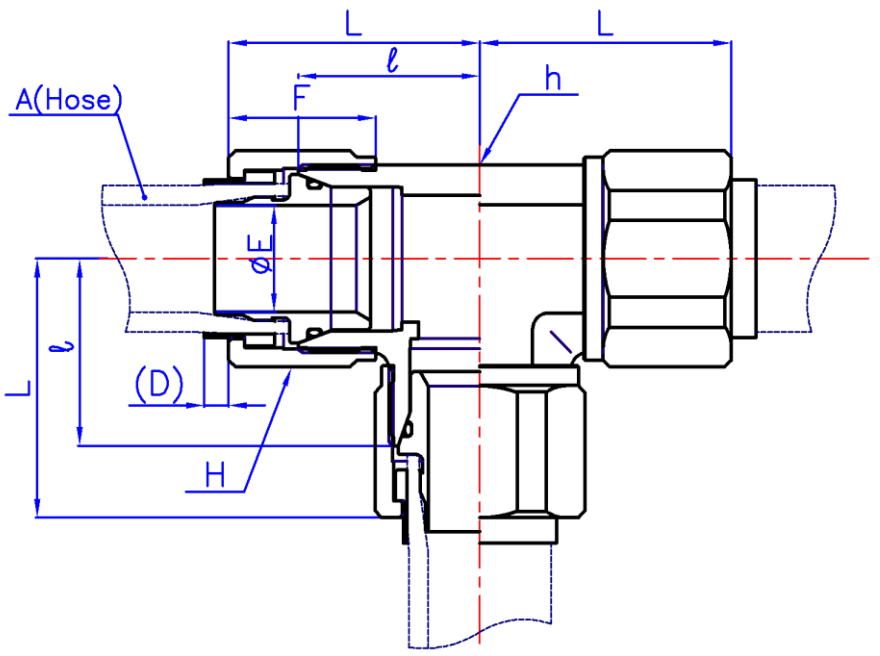

Part No.	A (Hose)	E	h (Flat)		H (Hex)	ℓ	L	F	(D)
	mm	mm	inch	mm	mm	mm	mm	mm	mm
E1TA 6X11 ss	6X11	6	13/16	20.6	22	25	35.1	22.0	2.0
E1TA 8X13.5 ss	8X13.5	8	13/16	20.64	22	25	35.1	22.0	2.0
E1TA 9X15 ss	9X15	9	15/16	23.81	24	27	37.6	22.5	2.5
E1TA 10X16 ss	10X16	10	15/16	23.81	24	27	37.6	22.5	2.5
E1TA 12X18 ss	12X18	12	1-1/16	26.99	27	28.2	40.3	24.0	3.0
E1TA 15X22 ss	15X22	15	1-1/4	31.8	32	32.5	45.6	25.0	4.0
E1TA 19X26 ss	19X26	19	1-5/16	33.3	36	33.3	46.1	27.0	4.5
E1TA 25X33 ss	25X33	25	1-11/16	42.9	46	44.5	65.3	37.5	4.0

e1-Touch	E1TI	Insert

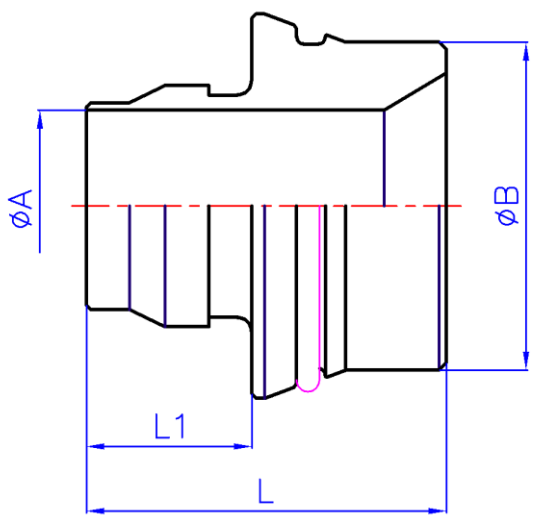

Part No.	A	B	L	L1	Oリング
	mm	mm	mm	mm	
E1TI 4X9 ss	4	9.53	17.5	9.5	S9
E1TI 6X11 ss	6	12.7	21	10.5	S12.5
E1TI 8X13.5 ss	8	12.7	21	10.5	S12.5
E1TI 9X15 ss	9	15.88	23.5	11.5	S15
E1TI 10X16 ss	10	15.88	23.5	11.5	S15
E1TI 12X18 ss	12	19.05	24.5	12.5	S18
E1TI 15X22 ss	15	22.23	27	13.5	S22
E1TI 19X26 ss	19	25.4	28.5	13.7	S25
E1TI 25X33 ss	25	31.75	36	18	S31.5
E1TI 32X41 ss	32	38.15	46	23	S39

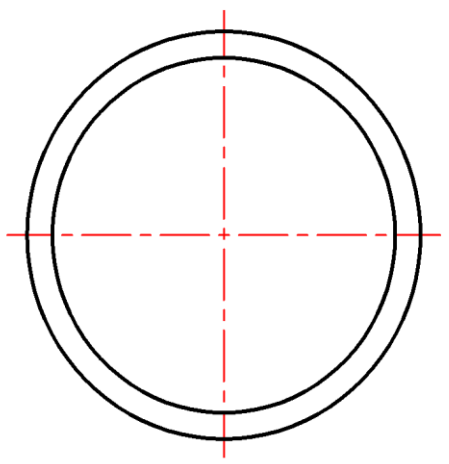

Part No.	A	O-ring
	mm	
E1TI -OR 4X9	4	S9
E1TI -OR 6X11	6	S12.5
E1TI -OR 8X13.5	8	S12.5
E1TI -OR 9X15	9	S15
E1TI -OR 10X16	10	S15
E1TI -OR 12X18	12	S18
E1TI -OR 15X22	15	S22
E1TI -OR 19X26	19	S25
E1TI -OR 25X33	25	S31.5
E1TI -OR 32X41	32	S39

e1-Touch	E1TK	Male Run Tee

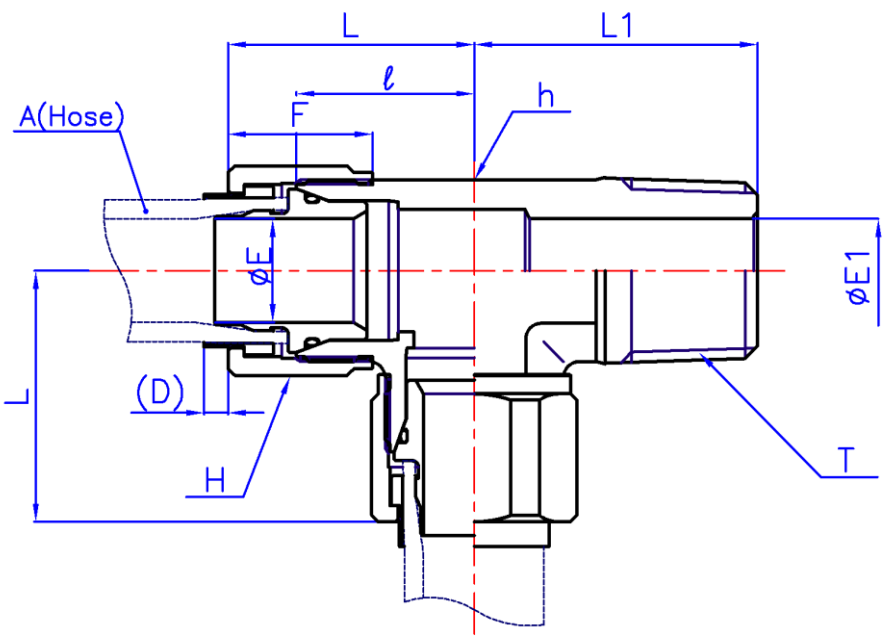

Part No.	A (Hose)	T (R)	E	E1	h (Flat)		H (Hex)	ℓ	L	L1	F	(D)
	mm		mm	mm	inch	mm	mm	mm	mm	mm	mm	mm
E1TK 8X13.5 -R6 ss	8X13.5	3/8	8	10.4	13/16	20.6	22	25	35.1	27.5	22	2
E1TK 19X26 -R12 ss	19X26	3/4	19	18.3	1-5/16	33.3	36	33.3	46.1	44	27	4.5
E1TK 19X26 -R16 ss	19X26	1	19	22.5	1-5/16	33.3	36	33.3	46.1	46.7	27	4.5

e1-Touch	E1TN	Male Branch Tee

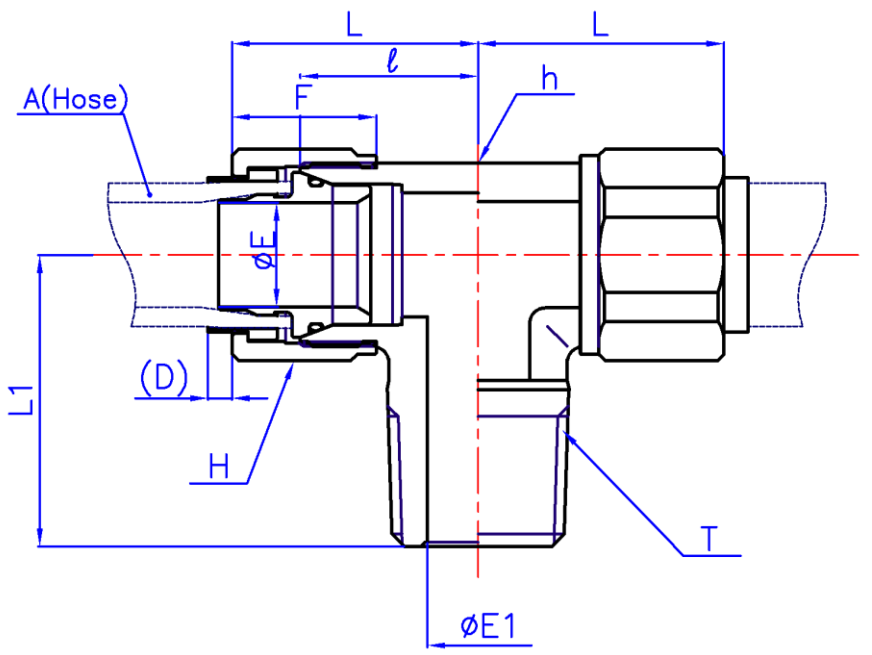

Part No.	A (Hose)	T (R)	E	E1	h (Flat)		H (Hex)	ℓ	L	L1	F	(D)
	mm		mm	mm	inch	mm	mm	mm	mm	mm	mm	mm
E1TN 12X18 -R4 ss	12X18	1/4	12	7.1	1-1/16	27	27	28.2	40.3	30.5	24	3
E1TN 12X18 -R6 ss	12X18	3/8	12	10.4	1-1/16	27	27	28.2	40.3	32	24	3
E1TN 12X18 -R8 ss	12X18	1/2	12	12.7	1-1/16	27	27	28.2	40.3	35.5	24	3
E1TN 12X18 -R12 ss	12X18	3/4	12	18.3	1-1/16	27	27	28.2	40.3	37.5	24	3
E1TN 15X22 -R4 ss	15X22	1/4	15	7.1	1-1/4	31.8	32	32.5	45.6	33	25	4
E1TN 15X22 -R6 ss	15X22	3/8	15	10.4	1-1/4	31.8	32	32.5	45.6	34	25	4
E1TN 15X22 -R8 ss	15X22	1/2	15	12.7	1-1/4	31.8	32	32.5	45.6	40	25	4
E1TN 15X22 -R12 ss	15X22	3/4	15	18.3	1-1/4	31.8	32	32.5	45.6	42	25	4
E1TN 19X26 -R6 ss	19X26	3/8	19	10.4	1-5/16	33.3	36	33.3	46.1	38	27	4.5
E1TN 19X26 -R16 ss	19X26	1	19	22.5	1-5/16	33.3	36	33.3	46.1	46.7	27	4.5

e1-Touch	E1TR	Reducing Union Tee

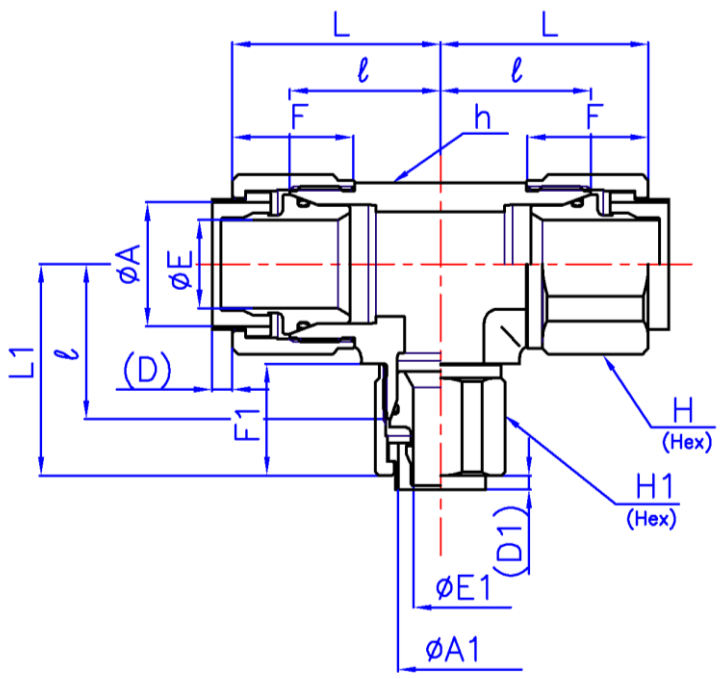

Part No.	A (Hose)	A1 (Hose)	E	E1	h (Flat)		H (Hex)	H1 (Hex)	ℓ	ℓ1	L	L1	F	F1	(D)
	mm	mm	mm	mm	inch	mm	mm	inch	mm	mm	mm	mm	mm	mm	mm
E1TR 12X18 -19X26 ss	12X18	19X26	12	19	1-5/16	33.3	27	36	33.3	45.4	46.1	24	27	3	4.5
E1TR 15X22 -8X13.5 ss	15X22	8X13.5	15	8	1-1/4	31.8	32	22	32.5	45.6	42.6	25	22	4	2
E1TR 15X22 -19X26 ss	15X22	19X26	15	19	1-5/16	33.3	32	36	33.3	46.4	46.1	25	27	4	4.5
E1TR 19X26 -8X13.5 ss	19X26	8X13.5	19	8	1-5/16	33.3	36	22	33.3	46.1	43.4	27	22	4.5	2
E1TR 19X26 -12X18 ss	19X26	12X18	19	12	1-5/16	33.3	36	27	33.3	46.1	45.4	27	24	4.5	3

e1-Touch	E1TY	BI-Lok Conversion Tee

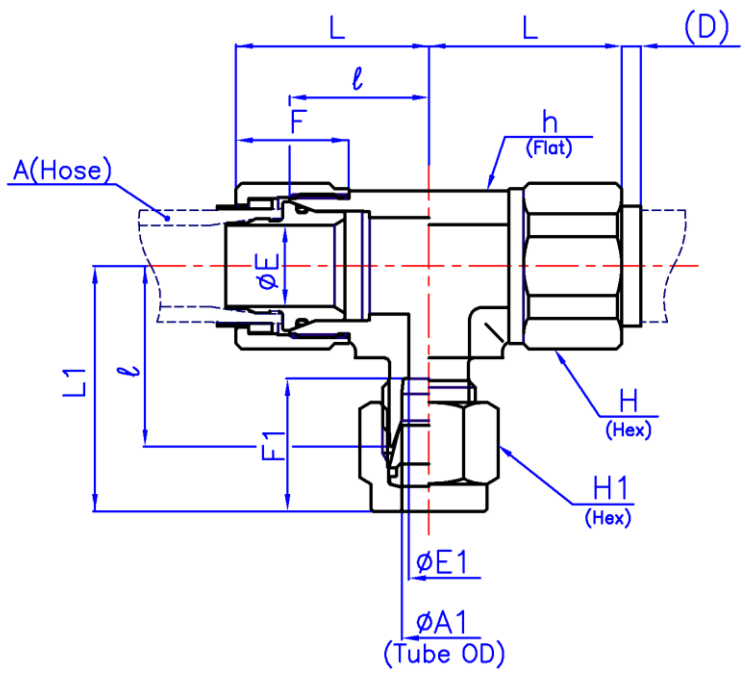

Part No.	A (Hose)	A1 (Hose)		E	E1	h (Flat)		H (Hex)	H1 (Hex)		ℓ	L	L1	F
	mm	inch	mm	mm	mm	inch	mm	mm	inch	mm	mm	mm	mm	mm
E1TY 15X22 -4 ss	15X22	1/4	6.35	15	4.8	1-1/4	31.8	32	9/16	14.29	32.5	45.6	40	25
E1TY 19X26 -6 ss	19X26	3/8	9.53	19	7.1	1-5/16	33.3	36	11/16	17.46	33.3	46.1	40.8	27
E1TY 19X26 -16 ss	19X26	1	25.4	19	22.5	1-5/16	33.3	36	1-1/2	38.1	33.3	46.1	45.9	27

e1-Touch	E1UA	Union

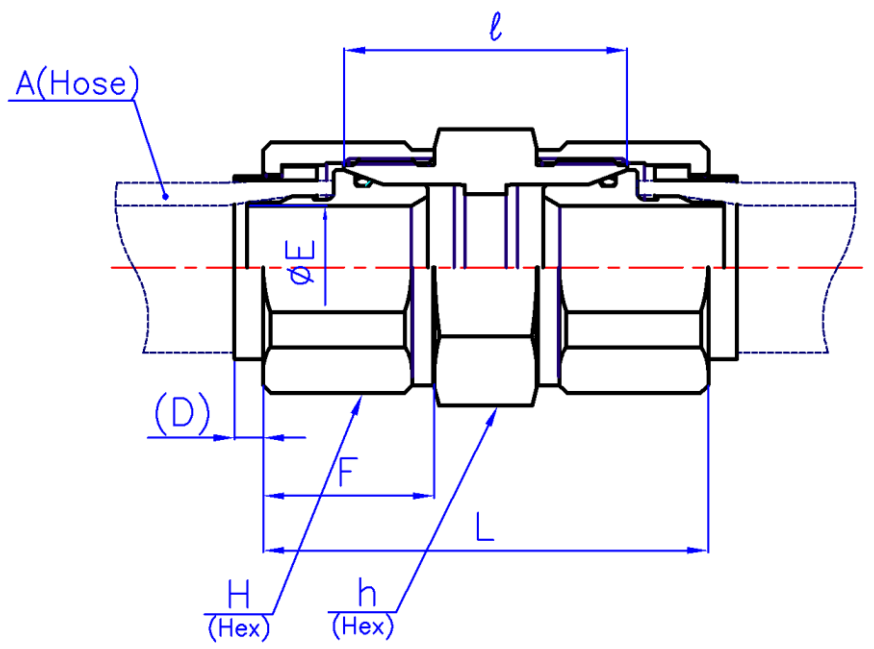

Part No.	A (Hose)	E	h (Hex)		H (Hex)	ℓ	L	F	(D)
	mm	mm	O.D.	mm	mm	mm	mm	mm	mm
E1UA 4X9 ss	4X9	4	5/8	15.88	17	30.2	49.4	21.5	2
E1UA 6X11 ss	6X11	6	13/16	20.64	22	31	51.2	22	2
E1UA 8X13.5 ss	8X13.5	8	13/16	20.64	22	31	51.2	22	2
E1UA 9X15 ss	9X15	9	15/16	23.8	24	31.8	53	22.5	2.5
E1UA 10X16 ss	10X16	10	15/16	23.8	24	31.8	53	22.5	2.5
E1UA 12X18 ss	12X18	12	1-1/16	26.99	27	33.3	57.5	24	3
E1UA 15X22 ss	15X22	15	1-3/16	30.16	32	35	61.2	25	4
E1UA 19X26 ss	19X26	19	1-3/8	34.93	36	40.5	66.1	27	4.5
E1UA 25X33 ss	25X33	25	-	46	46	48	89.6	37.5	4

e1-Touch	E1UR	Reducing Union

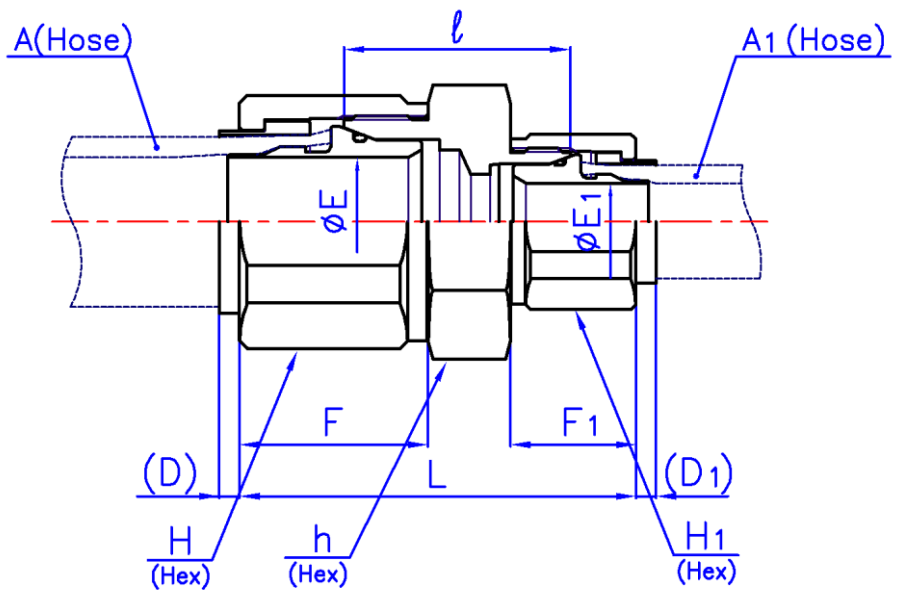

Part No.	A (Hose)	A1 (Hose	E	E1	h (Hex)		H (Hex)	H1 (Hex)	ℓ	L	F	F1	(D)
	mm	inch	mm	mm	inch	mm	mm	inch	mm	mm	mm	mm	mm
E1UR 6X11 -4X9 ss	6X11	4X9	6	4	13/16	20.64	22	17	31	50.7	22	21.5	2
E1UR 8X13.5 -6X11 ss	8X13.5	6X11	8	6	13/16	20.64	22	22	31	51.2	22	22	2
E1UR 9X15 -8X13.5 ss	9X15	8X13.5	9	8	15/16	23.81	24	22	31.8	52.5	22.5	22	2.5
E1UR 10X16 -9X15 ss	10X16	9X15	10	9	15/16	23.81	24	24	31.8	53	22.5	22.5	2.5
E1UR 12X18 -10X16 ss	12X18	10X16	12	10	1-1/16	26.99	27	24	33.3	56	24	22.5	3
E1UR 15X22 -12X18 ss	15X22	12X18	15	12	1-3/16	30.16	32	27	35	60.2	25	24	4
E1UR 19X26 -12X18 ss	19X26	12X18	19	12	1-3/8	34.93	36	27	38.1	63	27	24	4.5
E1UR 19X26 -15X22 ss	19X26	15X22	19	15	1-3/8	34.93	36	32	44	69.9	27	25	4.5
E1UR 25X33 -15X22 ss	25X33	15X22	25	15	-	46	46	32	44.5	78.4	37.5	25	4
E1UR 25X33 -19X26 ss	25X33	19X26	25	19	-	46	46	36	47	80.6	37.5	27	4

e1-Touch	E1URB	BI-Lok Conversion Union

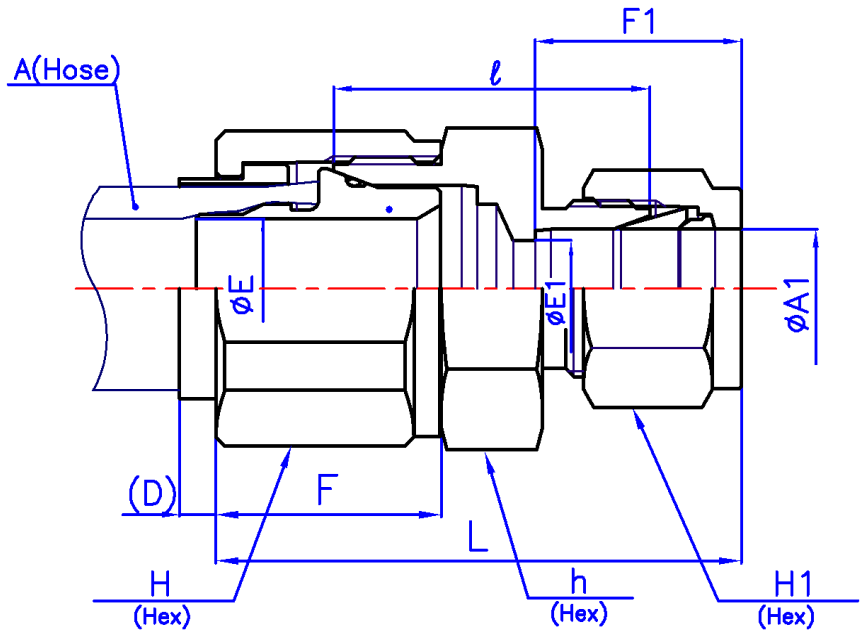

Part No.	A (Hose)	A1 (Tube O.D.)		E	E1	h (Hex)		H (Hex)	H1 (Hex)		ℓ	L	F	F1	(D)
	mm	inch	mm	mm	mm	inch	mm	mm	inch	mm	mm	mm	mm	mm	mm
E1URB 4X9 -4 ss	4X9	1/4	6.35	4	4.8	5/8	15.88	17	9/16	14.29	28.4	45.5	21.5	15.4	2
E1URB 6X11 -2 ss	6X11	1/8	3.18	6	2.3	13/16	20.64	22	7/16	11.11	29	45.8	22	13	2
E1URB 6X11 -4 ss	6X11	1/4	6.35	6	4.8	13/16	20.64	22	9/16	14.29	29.5	47.1	22	15.4	2
E1URB 8X13.5 -4 ss	8X13.5	1/4	6.35	8	4.8	13/16	20.64	22	9/16	14.29	29.5	47.1	22	15.4	2
E1URB 8X13.5 -6 ss	8X13.5	3/8	9.53	8	7.1	13/16	20.64	22	11/16	17.46	31	48.6	22	17	2
E1URB 8X13.5 -8 ss	8X13.5	1/2	12.7	8	10.4	13/16	20.64	22	7/8	22.23	31	51.4	22	23	2
E1URB 9X15 -2 ss	9X15	1/8	3.18	9	2.3	15/16	23.81	24	7/16	11.11	29.8	47.1	22.5	13	2.5
E1URB 9X15 -3 ss	9X15	3/16	4.76	9	3	15/16	23.81	24	1/2	12.7	30	47.3	22.5	13.8	2.5
E1URB 9X15 -6 ss	9X15	3/8	9.53	9	7.1	15/16	23.81	24	11/16	17.46	31.8	49.9	22.5	17	2.5
E1URB 10X16 -6 ss	10X16	3/8	9.53	10	7.1	15/16	23.81	24	11/16	17.46	31.8	49.9	22.5	17	2.5
E1URB 10X16 -8 ss	10X16	1/2	12.7	10	10.4	15/16	23.81	24	7/8	22.23	31.8	52.7	22.5	23	2.5
E1URB 12X18 -6 ss	12X18	3/8	9.53	12	7.1	1-1/16	26.99	27	11/16	17.46	33.3	52.9	24	17	3
E1URB 12X18 -8 ss	12X18	1/2	12.7	12	10.4	1-1/16	26.99	27	7/8	22.23	33.3	55.7	24	23	3
E1URB 12X18 -12 ss	12X18	3/4	19.05	12	15.8	1-1/16	26.99	27	1-1/8	28.58	33.3	55.7	24	24.6	3
E1URB 15X22 -8 ss	15X22	1/2	12.7	15	10.4	1-3/16	30.16	32	7/8	22.23	35	58.4	25	23	4
E1URB 15X22 -12 ss	15X22	3/4	19.05	15	15.8	1-3/16	30.16	32	1-1/8	28.58	35	58.4	25	24.6	4
E1URB 19X26 -6 ss	19X26	3/8	9.53	19	7.1	1-3/8	34.93	36	11/16	17.46	39	59.2	27	17	4.5
E1URB 19X26 -8 ss	19X26	1/2	12.7	19	10.4	1-3/8	34.93	36	7/8	22.23	39.2	62.3	27	23	4.5
E1URB 19X26 -12 ss	19X26	3/4	19.05	19	15.8	1-3/8	34.93	36	1-1/8	28.58	38.1	61.2	27	24.6	4.5
E1URB 19X26 -16 ss	19X26	1	25.4	19	22.5	1-3/8	34.93	36	1-1/2	38.1	40.5	65.9	27	31.6	4.5
E1URB 25X32 -8 ss	25X32	1/2	12.7	25	10.4	-	46	46	7/8	22.23	43	74.1	37.5	23	4
E1URB 25X32 -12 ss	25X32	3/4	19.05	25	15.8	-	46	46	1-1/8	28.58	44	75.1	37.5	24.6	4
E1URB 25X32 -16 ss	25X32	1	25.4	25	22.5	-	46	46	1-1/2	38.1	47	80.4	37.5	31.6	4
E1URB 25X33 -8 ss	25X33	1/2	12.7	25	10.4	-	46	46	7/8	22.23	43	74.1	37.5	23	4
E1URB 25X33 -12 ss	25X33	3/4	19.05	25	15.8	-	46	46	1-1/8	28.58	44	75.1	37.5	24.6	4
E1URB 25X33 -16 ss	25X33	1	25.4	25	22.5	-	46	46	1-1/2	38.1	47	80.4	37.5	31.6	4

IHARA SCIENCE CORPORATION

YST 01